AIRCRAFT OPERATING PROBLEMS

NASA Langley Research Center
Langley Station, Hampton, Va.

Presented at Field Inspection of Advanced Research and Technology

Hampton, Virginia
May 18-22, 1964

AIRCRAFT OPERATING PROBLEMS

At this stop, we would like to talk about the research NASA does on aircraft operating problems - that is, on those problems of general concern that arise in the everyday operation of aircraft - problems such as fire hazards, collision avoidance, all-weather flight, noise, air traffic control, and take-off and landing.

A familiar example of NASA research on take-off and landing problems is that connected with tire hydroplaning, which can result in almost complete loss of braking and directional control at high speeds on wet runways. There will be a demonstration at the Landing Loads Track where a tire was tested under hydroplaning conditions.

Today, as other examples of our work on aircraft operating problems, we will discuss research on sonic boom and aircraft noise abatement, low-speed flight of powered-lift aircraft, and the supersonic transport in the air traffic control system.

SONIC BOOM AND AIRCRAFT NOISE ABATEMENT

One of the most important considerations in the operation of supersonic aircraft over land areas is the sonic boom. We will begin our discussion of the sonic boom problem by referring to this next chart which has been prepared to aid us in reviewing some of the concepts involved. If the shock wave patterns generated by the airplane in supersonic flight could be made visible, they would look about like this during nearly the entire supersonic portion of the flight. These shock waves are moving at the speed of the airplane, they are observed on the ground track and also several miles to each side as transient pressure disturbances, as illustrated here. This N-wave type pressure wave has associated with it a Δp, which is a measure of the intensity, and a λ, which is the wave length, both of which are a function of the airplane geometry and operating conditions. Of course, the sonic boom signature does not always have this exact shape since atmospheric effects can cause the pressure peaks to be accentuated in some cases and to be rounded off in others. Such wave shape changes are incidentally associated with low altitude atmospheric disturbances rather than those at high altitudes. The intensity Δp, wavelength λ, and the shape of the wave are all believed to be significant in the sonic boom response problem.

One of the questions we have been trying to answer is, "What is the tolerable range of sonic boom exposures for communities under the flight path and for other aircraft?" Recent studies have indicated that the responses of other aircraft to sonic booms were markedly less than those due to such commonly encountered phenomena as moderate air turbulence, and thus were not serious problems.

A much more difficult problem to define is the community response to sonic booms, particularly for proposed supersonic transports. Needless to say, our studies to date have not given us the final answers. We have reached some interim conclusions, and we would like to share them with you.

Let us see what levels are currently being experienced due to routine military training operations. These levels are shown on the next chart as a function of altitude of the aircraft. Data are shown for fighters and bombers in steady flight and for maneuvers, and those estimated for the proposed supersonic transport are superposed as the red shaded area. Two points should be noted. The ranges of overpressure values shown for each aircraft are associated with atmospheric effects, and exposures of nearly 6 lb/sq ft have been experienced over some of our cities.

In analyzing a number of complaint records in Air Force files and the Oklahoma City experiments now going on under FAA sponsorship, it is noted that people are more concerned about their building structures than they are about themselves. The primary structural frames of buildings are not adversely affected, and hence there is no serious safety problem. Reports of structural damage refer invariably to the secondary structures such as wall surface treatments, glass, etc. Damage of this sort that is reported to have been caused by sonic booms can also result, of course, from other causes such as weather, road traffic, and routine living activities, and hence is very difficult to validate.

Another problem that still commands our attention, after many years, is the power plant noise in airport communities during landings and take-offs. The roaring noise from the jet exhaust has been substantially reduced by transition to fan-type power plants for which the exhaust velocities are lower. These newer type power plants have larger compressor and fan components, however, and the whining noise radiating from the front of the engine is now, in many cases, more significant. This whining noise is represented by these spikes in the spectrum, and they are readily observable during the landing approach. Current research to minimize this inlet noise is taking various forms; for instance, reduction at the source involves studies of the rotor-stator interaction, changes in the inlet geometry, and mode of operation are being evaluated to minimize forward radiation of noise. There are studies of subjective reaction of people to determine what properties of the noise they most dislike. Finally, the possibilities of using steeper approaches to airports are being studied as a means of increasing the distance between source and observer.

SLOW SPEED FLIGHT WITH POWERED-LIFT SYSTEMS

It has been known for some time that powered-lift systems, such as boundary-layer control or (BLC), can produce substantial increases in the lift capability of airplanes with resulting reduction in landing speeds. These low landing speeds are very desirable from the standpoint of reducing landing distance, lowering weather minimums, and obtaining greater safety.

Over the past years considerable boundary-layer control work has been done by both NASA and the aircraft industry. The NASA work has consisted mainly of basic boundary-layer control research at the Ames and Langley Research Centers while the industry work has been primarily pointed towards the development of various boundary-layer control systems. Two examples of recent development work by industry are this Lockheed BLC C-130 propeller-driven airplane which has been flying for several years and the Boeing 707 jet transport prototype (the 367-80) which has been flying with BLC since the first of this year.

At present, the C-130 is being used in research at Ames to study the low-speed flight characteristics of propeller-driven aircraft using powered-lift BLC systems.

This airplane is equipped with a flap that will deflect 90° and has external jet pods for producing the air required for boundary-layer control over the flaps and control surfaces.

Recently there has been increased interest in the application of powered-lift systems to jet transports, which have relatively high landing speeds. (Jet Transport Stall Speeds)

This is illustrated in the next chart which shows the variation of jet transport stall speeds and lift coefficients with various high-lift devices. Here is the range of stall speeds with conventional flap systems and here is the range of speeds with powered-lift systems for a jet transport with a wing loading of 60 pounds per square foot.

Jet transports with conventional flaps are represented by this point at a little over 100 knots stalling speed. One possible way to lower this stalling speed is to use larger, more sophisticated conventional flap systems. The use of such flaps can reduce the stalling speed as much as 20 knots as shown by this point, but this reduction is obtained, at the expense of increased bulkiness and weight.

Starting in this range the powered-lift systems with their lighter weight and higher lift capability begin to offer considerable promise.

Since very little flight research has been conducted in this powered-lift range for jet transports, Langley has initiated a research program using the Boeing 707 prototype airplane, which you saw this morning in the fly-by. This airplane is located here on the chart.

In addition to its BLC system, it has leading edge slats and Krueger flaps on the wing, and a large horizontal tail with an inverted leading edge slat for trim at low speeds.
(Boundary Layer Control Flap Installation)

The operation of the BLC system is illustrated on the next chart. The boundary-layer control air is bled from the compressors of the engines. For safety reasons, there are two separate ducting systems each covering the total span of the flaps. The BLC blowing nozzles alternate between the two distribution ducts to minimize the loss of lift in event of failure of one of the systems. The primary nozzles blow air out through this ejector nozzle, entraining secondary air which increases the blowing effectiveness.

In order to be able to operate the engines at the high powers required for the BLC system and still obtain the low thrust settings required for the landing approach conditions, a thrust modulation system is used. This system offers a fast-acting and powerful glide path control, and is also used as part of an automatic speed control system.

The airplane is being used to study flight characteristics at very low speeds for jet transports with powered-lift systems and to help establish preliminary flying qualities requirements for such aircraft.

In flight tests to date we have obtained stalling speeds of approximately 70 knots with the flaps deflected 70° and the BLC system operating. This compares with approximately 100 knots for a jet transport with conventional flaps.

The flight program is still in the early stages so it is too early at this time to report on any results or conclusions.

FLY-BY OF BOEING 707 PROTOTYPE WITH BLC

On the way to the West area the buses will stop for you to see a fly-by of a research airplane that is being used by NASA in a low-speed flight study of jet transports equipped with powered-lift systems. This airplane is the original Boeing 707 prototype equipped with a boundary-layer control or BLC system.

In the fly-by, the airplane will have its BLC system in operation and will be flying at an approach speed of about 80 knots which compares with 130 knots for the normal approach speeds of conventional jet transports. A discussion of the use of this airplane in research here at Langley will be made later today at one of your stops on the tour.

SUPERSONIC TRANSPORT IN TRAFFIC CONTROL SYSTEM

As another example of our research on aircraft operating problems, we are studying the problems expected in connection with the integration of the proposed supersonic transport into the air traffic control system. It is expected that the different flight characteristics of the SST and the greater constraints on allowable flight paths for this aircraft will create problems of compatibility with present ATC procedures and will cause an increased workload for the flight crew. ATC holding delays such as experienced by present aircraft would be extremely penalizing for the SST with its high-fuel consumption rates. On the other hand, it is expected that accommodation of this new aircraft into the ATC system will create problems such as keeping aircraft safely separated and increased workload for the controllers.

In order to study these problems, the NASA and the FAA, that is the Federal Aviation Agency, have initiated a cooperative research program using the supersonic transport simulator located at your right in conjunction with an air traffic control simulator located at the FAA's Research Center at Atlantic City, New Jersey. This cooperative program draws on the experience of NASA in the areas of performance, stability and control, and operating problems of supersonic aircraft and the experience of the FAA in air traffic control procedures.

An interior view of the 4-place SST flight compartment is shown in the upper photograph. The cockpit is equipped with instruments and controls like those of present-day jet transport aircraft. An essential element of the device is a bank of five analog computer units located in another building to which the SST simulator is electronically linked. The characteristics of various designs of the SST, based on wind tunnel studies, can be programed in these computers. Signals from the pilots' control motions thus initiate simulated aircraft motions reflected in signals to the pilots' displays. The combination of flight compartment and computers provides a realistic environment for an actual full flight crew to make simulated flights in the SST.

The air traffic control environment is created by a simulation of air traffic control facilities, staffed by experienced FAA controllers, and an air traffic sample produced by the electronic signal generators. Each signal generator represents one airplane. The operator flies the simulated airplane by maneuvering a spot of light along the airways map according to a script and instructions from the controllers given over a simulated radio network. The position of each simulated aircraft appears as a blip on the controller's radar display.

The SST simulator is linked to the air traffic control environment by telephone data and voice links, allowing simulated flights in real-time air traffic control situations to be made. Position reports and ATC instructions are carried over these telephone links. The SST also appears as another target on the controller's radar displays.

The test program is designed to study arrival and departure operations to and from Kennedy Airport in the New York area, lower altitude airways into and out of Kennedy, LaGuardia, and Newark and the other 40-odd airports. Proposed

designs similar to the fixed-geometry and variable-sweep wing concepts illustrated by these models will be tested.

We expect to get two important types of information from this program:

First: information required to make the SST compatible with the ATC system - information on items such as equipment, flying qualities, fuel reserves, and operating procedures; and

Second: for the ATC system itself, we expect to get information on such things as airspace and priority requirements and controller workload needed to accommodate the SST in the system.

This research program has only recently been initiated. An actual test run is now underway.

- SONIC BOOM AND AIRCRAFT NOISE ABATEMENT
- LOW-SPEED FLIGHT OF POWERED-LIFT AIRCRAFT
- THE SUPERSONIC TRANSPORT IN THE AIR TRAFFIC CONTROL SYSTEM

NATURE OF SONIC BOOM

SONIC BOOM EXPOSURE LEVELS

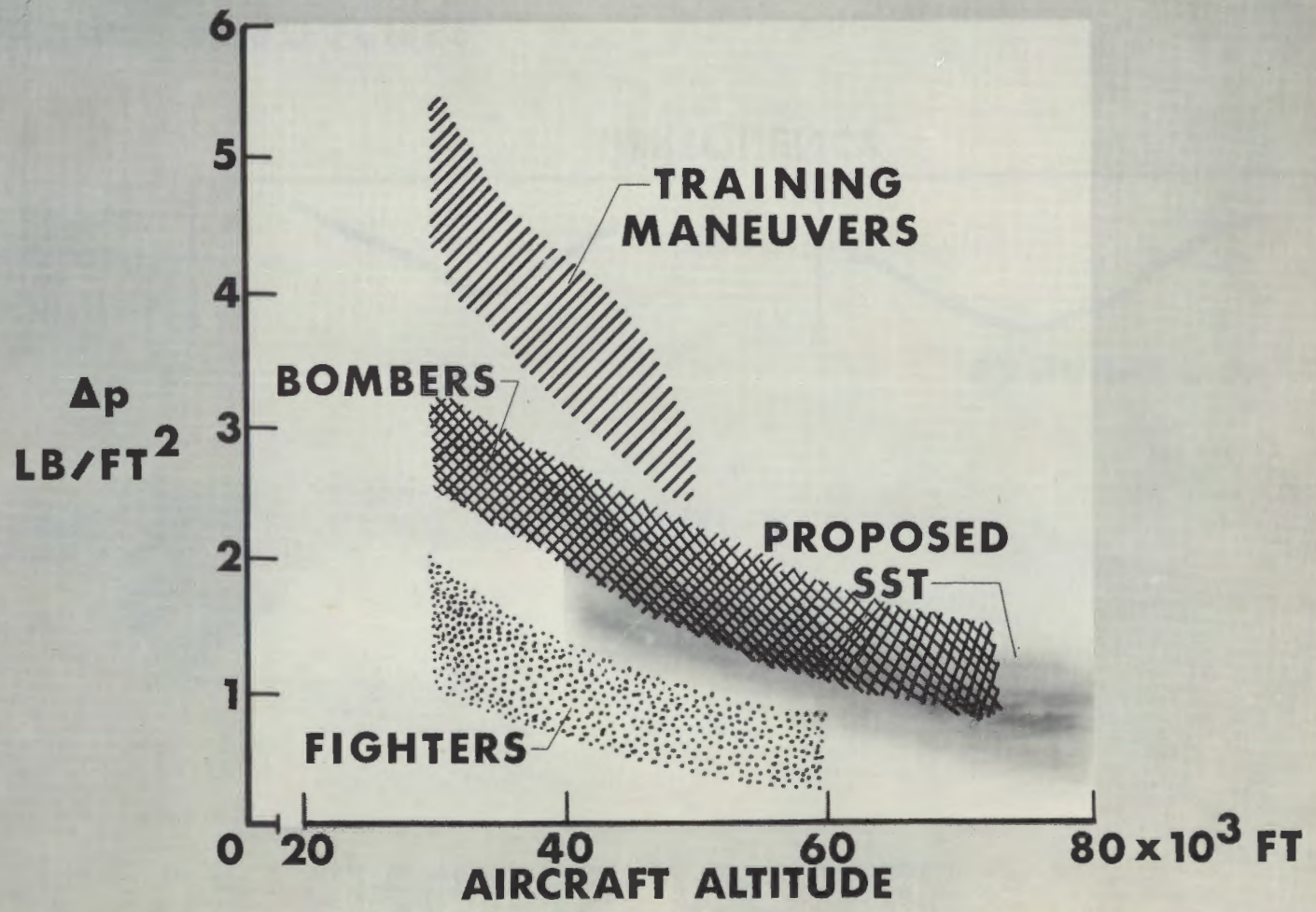

ENGINE NOISE

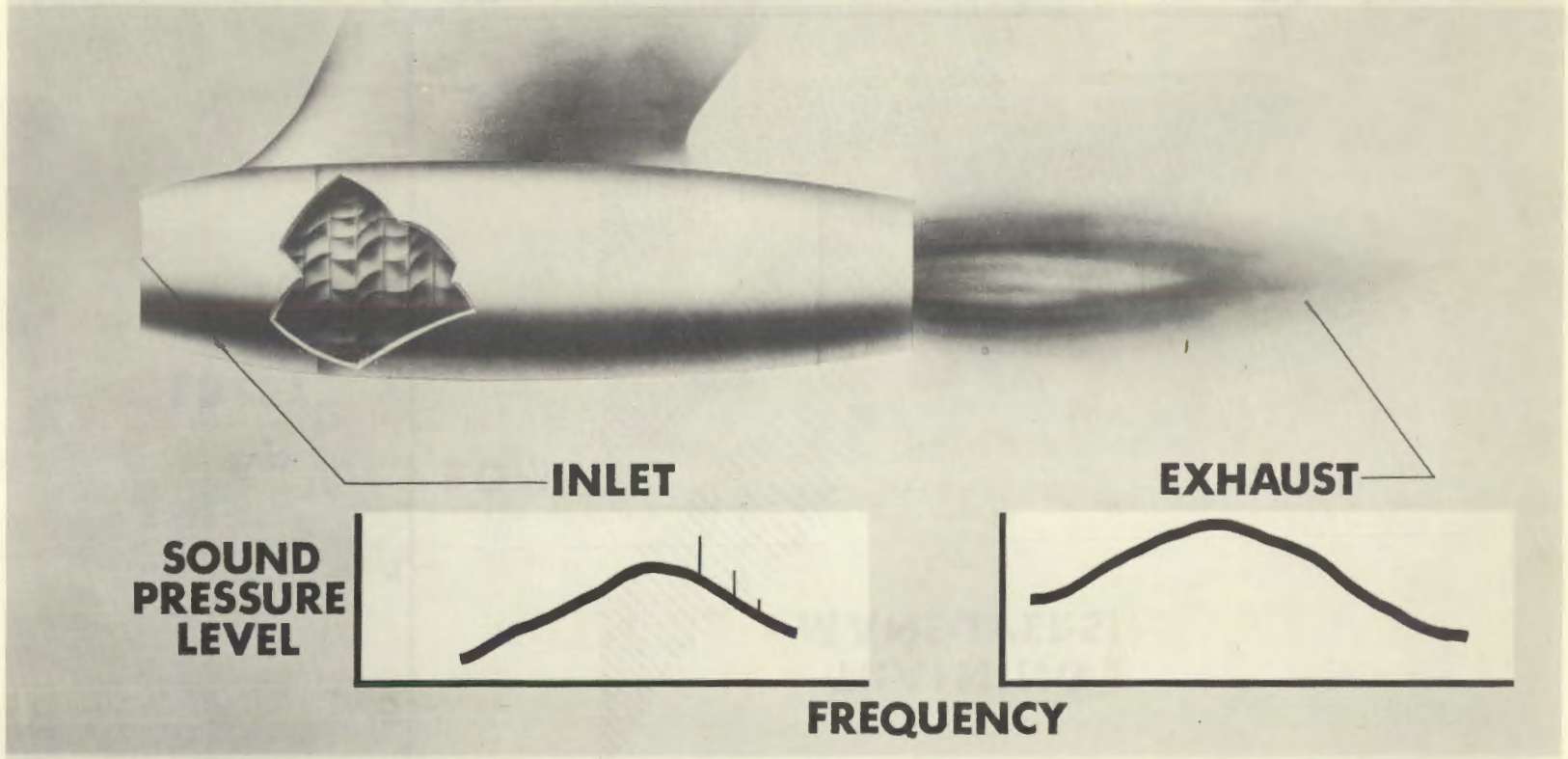

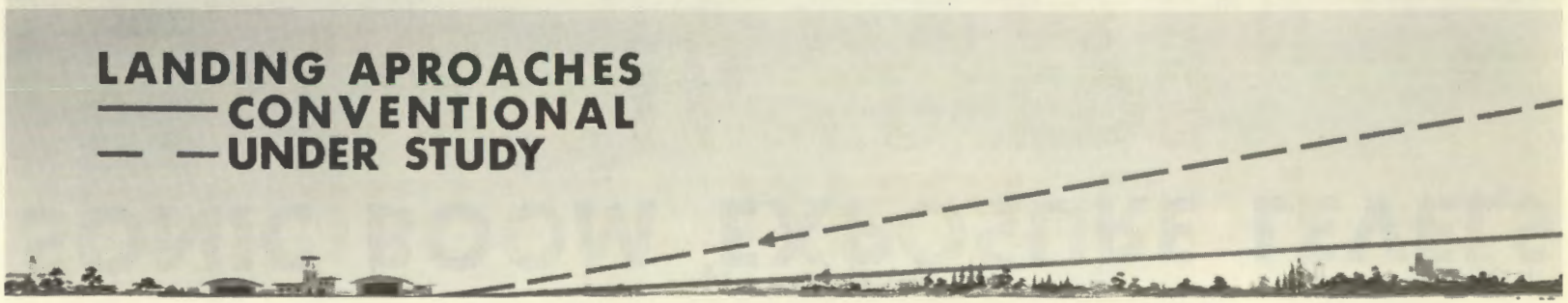

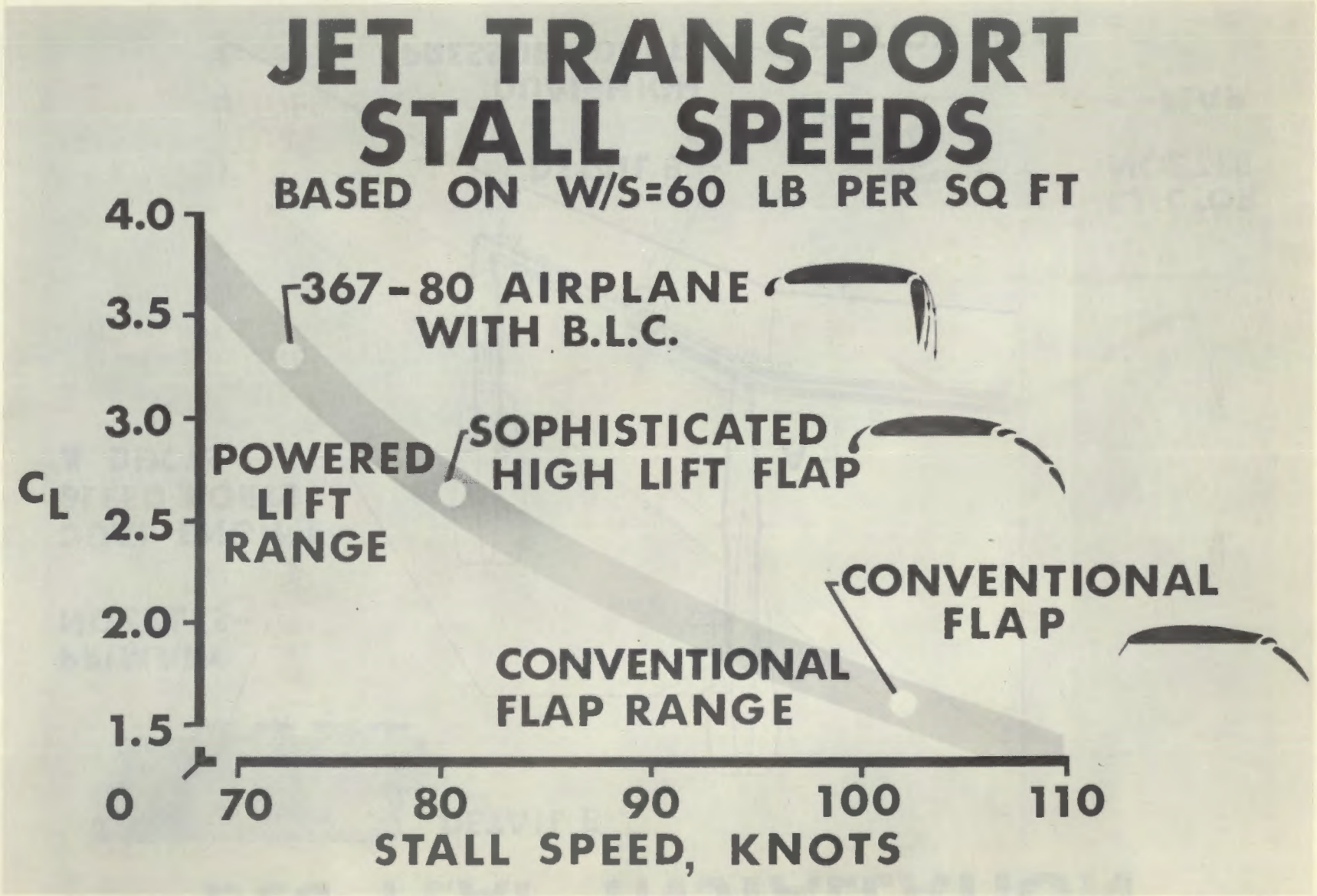
JET TRANSPORT
STALL SPEEDS
BASED ON W/S=60 LB PER SQ FT
4.0
3.5
3.0
2.5
2.0
1.5
0
C_L
367-80 AIRPLANE
WITH B.L.C.
POWERED
LIFT
RANGE
SOPHISTICATED
HIGH LIFT FLAP
CONVENTIONAL
FLAP
CONVENTIONAL
FLAP RANGE
70
80
90
100
110
STALL SPEED, KNOTS

BLC FLAP INSTALLATION

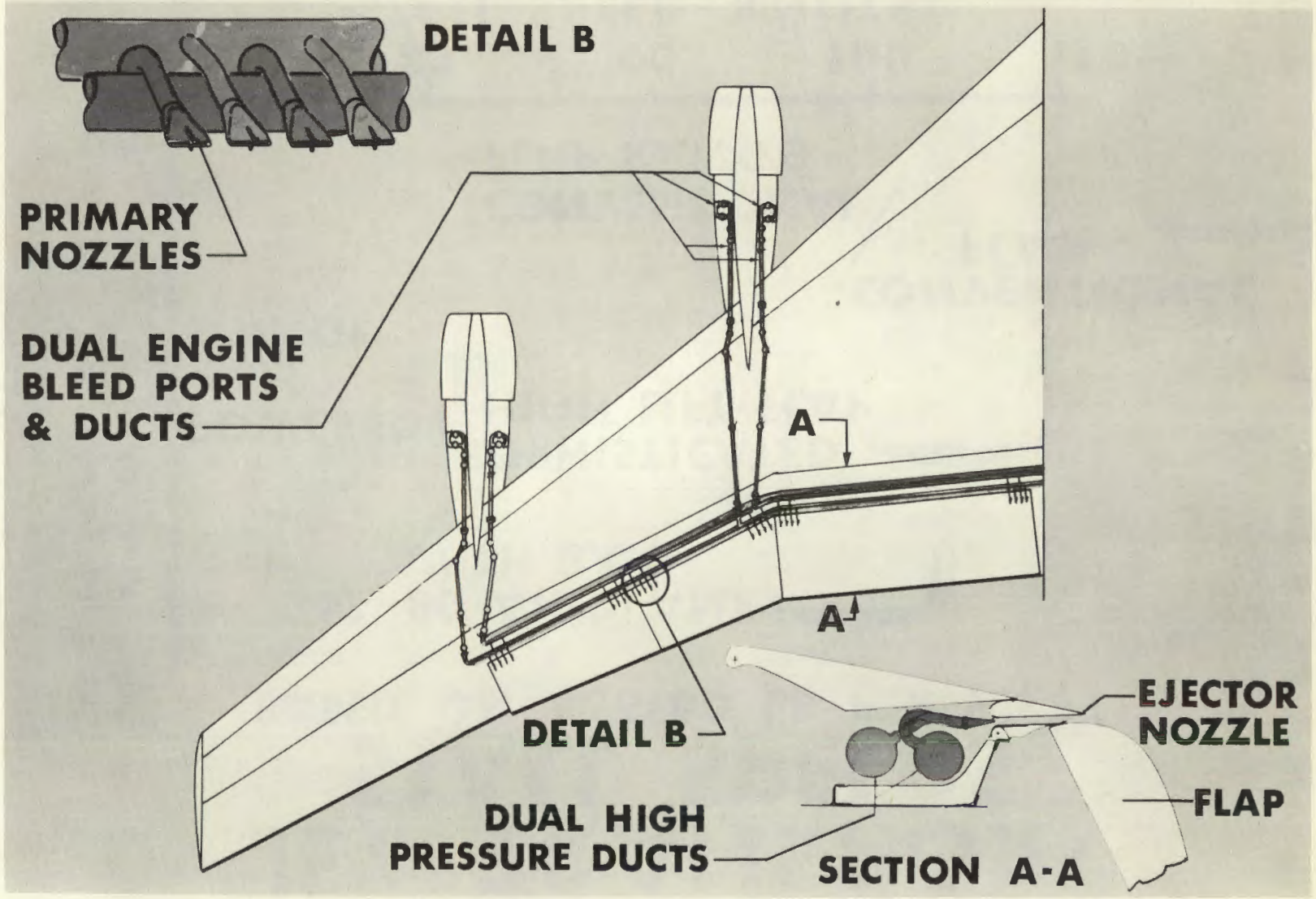

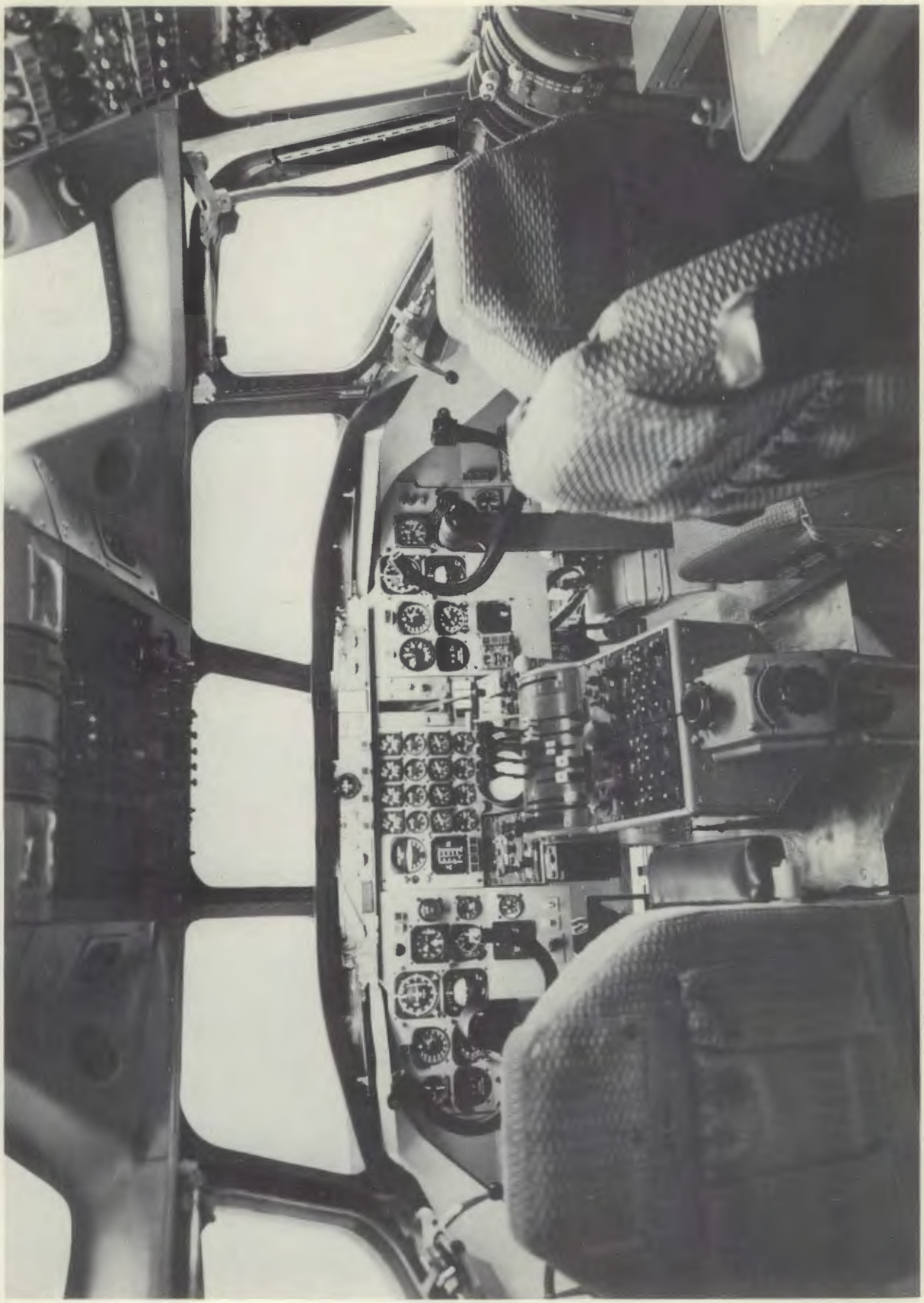

THRUST MODULATOR

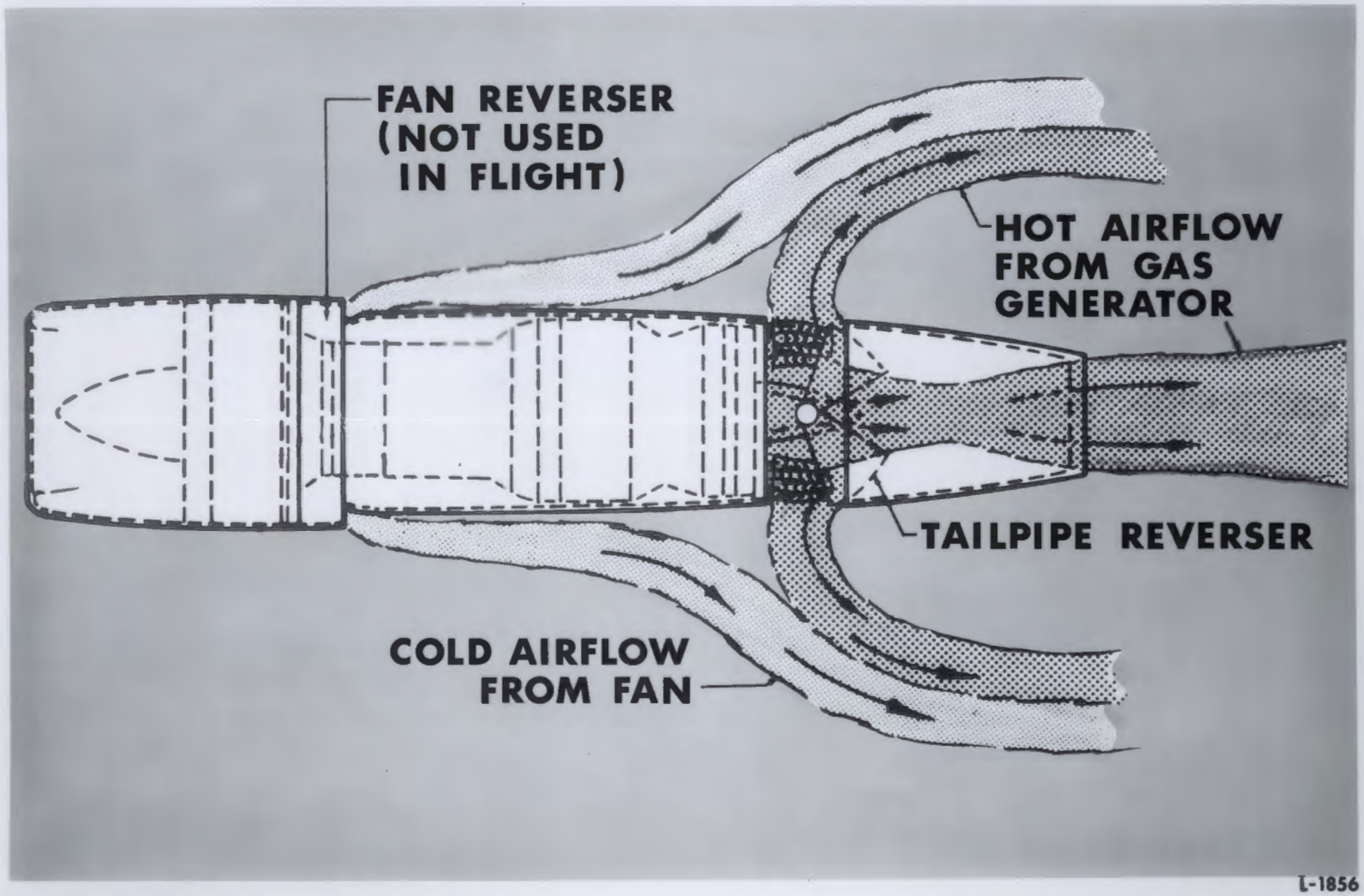

L-1856

AIRWAYS MAP NEW YORK TERMINAL AREA

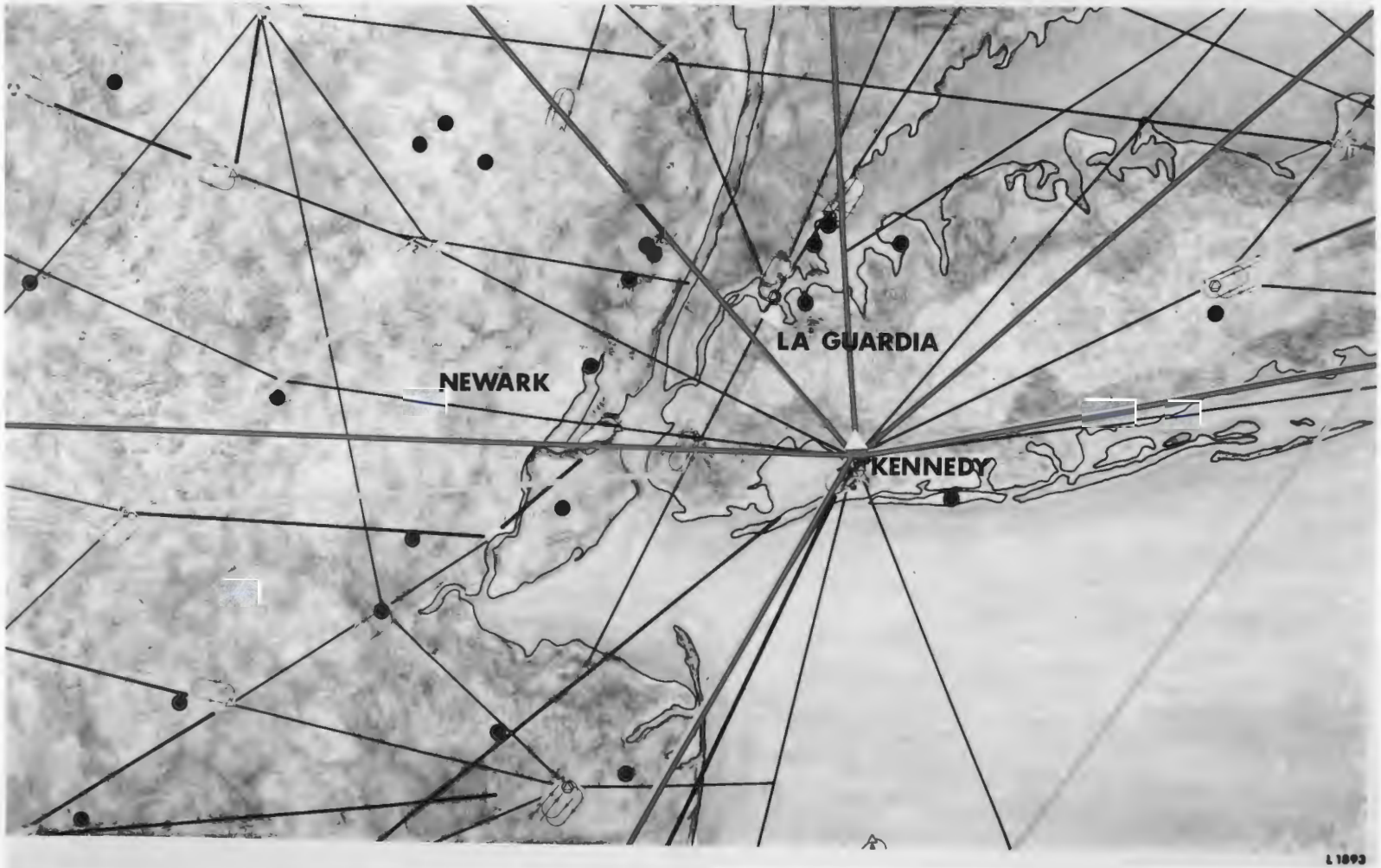

L 1093

COMPLAINT PATTERN

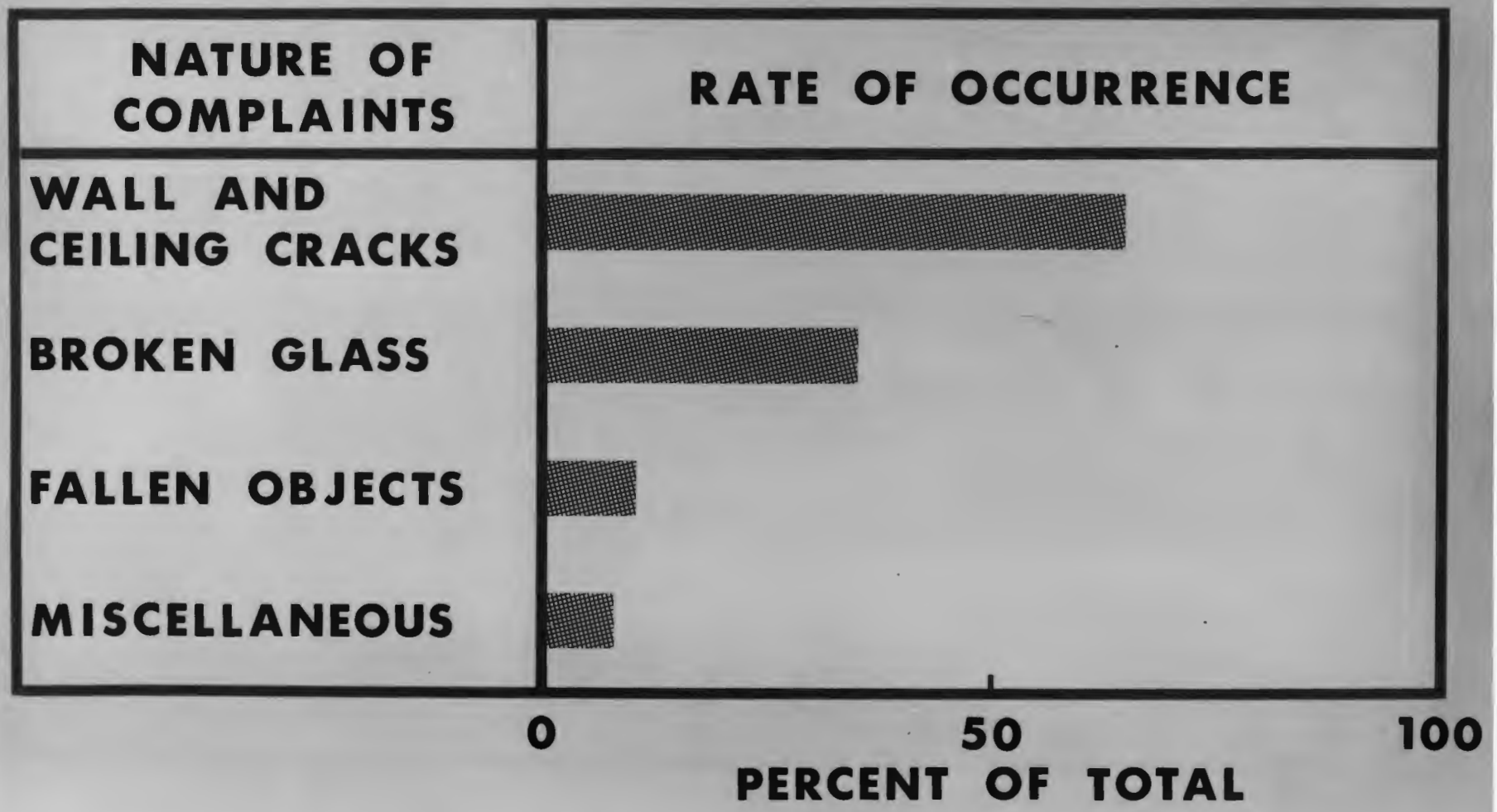

L-1861

AIRCRAFT OPERATING PROBLEMS

1-FIRE HAZARDS
2-COLLISION AVOIDANCE
3-HUMAN FACTORS
4-PILOT'S DISPLAYS
5-ALL-WEATHER FLIGHT
6-NOISE
7-AIR TRAFFIC CONTROL
8-LANDING AND TAKE-OFF

L 1930

NASA
L-64-4812

NASA
L-64-4813