AIRCRAFT NUCLEAR PROPULSION

As you all know, there is a large scale national effort in progress in the field of aircraft nuclear propulsion. We would like to discuss briefly some of the advantages and disadvantages of nuclear flight and the NACA's contribution to the national effort in this field.

The goal of the aeronautical engineer has always been to fly farther, faster, and higher. The exploding of the first atom bomb made his dreams seem possible. He saw a few pounds of uranium release enough energy to fly his fuel hungry supersonic airplane around the world many times without refueling.

He soon realized, however, that there were some disadvantages to overcome before he could use this new energy source. The first slide shows the familiar fission process. A neutron causes the uranium atom to fission producing two large fission fragments, two to three neutrons, and alpha, beta, and gamma radiation. An appreciable fraction of neutrons and gamma rays escape from the nuclear reactor. Heavy shielding is required to protect the crew from these neutrons and gamma rays. The burden of carrying this heavy shield is the first major disadvantage which must be overcome in order to achieve nuclear flight.

The next slide shows a schematic diagram of a nuclear reactor and its shield. The uranium is contained in the fuel elements shown here. Coolant enters the reactor here, is heated in passing over the fuel element, and emerges here.

The simplest nuclear engine is the direct air cycle turbojet which is shown on the chart to the left. The air from the compressor is heated by the reactor, passes through the turbine and out the exhaust nozzle, producing thrust. Actually several turbojet engines would be powered by one reactor. The reactor replaces the combustion chamber of the conventional engine. However, in the combustion chamber, the energy is produced directly in the air stream which is hotter than the walls of the combustor. These walls can even be cooled if necessary. In the nuclear reactor the energy is produced in the walls of the fuel element and these walls are hotter than the air stream. Therefore, the difficulties of obtaining high turbine inlet temperatures are increased because the reactor walls have to operate at a higher temperature than the air stream. The problem of attaining high gas temperatures in spite of still higher reactor wall temperatures is the second major problem which must be overcome in order to achieve nuclear flight.

To get a better feel for the two major problems of nuclear flight, shield weight and temperature, let us examine the performance of a large chemical airplane. In the next slide, the weight distribution of a conventional airplane is plotted as a function of flight speed. The total airplane weight is shown as the horizontal line. Structure and payload take up 50 percent of the airplane weight. This leaves 50 percent of the weight for engine and fuel. The engine weight variation with flight speed is shown by the widening yellow area. A reasonable design speed for the airplane is shown by the vertical dotted line. The range of the airplane would be about 3000 miles.

If we wished to replace the chemical engine in this airplane with a nuclear engine, our engine weight would be increased by the weight of the reactor and shield. If the reactor and shield weight were no more than the fuel weight, this would be possible since the weight of the nuclear fuel, uranium, is negligible. The nuclear airplane could fly at the same speed as the chemical plane, but its range would be unlimited. However, if the weight of reactor and shield exceeded the weight of the fuel, the nuclear plane would have to fly at a slower speed. If the reactor and shield were too heavy, the plane would not fly at all.

So far we have not talked about turbine inlet temperature. If the problem of high reactor wall temperatures limited the nuclear engine to turbine inlet temperatures lower than that of the chemical engines, then more engines or larger engines would be necessary, and there would be less weight left over for the reactor and shield. Here again are the two major problems in achieving nuclear flight. The shield weight must be kept low; the turbine inlet temperature must be kept high.

We will first discuss the problem of attaining the highest possible turbine inlet temperature. We have seen that in a nuclear reactor, heat is generated directly within the material of the fuel elements, which are the hottest part of a nuclear propulsion system. Our first temperature limitation is then due to the material from which we fabricate our fuel elements. High temperature material problems and their characteristics are discussed in greater detail at the Materials Research Exhibit.

At any given state of materials technology, aeronautical engineers must accept the temperature limits of the materials available, and do the best they can with them. Our goal is to produce the highest possible turbine inlet temperature with the materials available.

Quite obviously, we will obtain the highest air temperature if the reactor is so designed that every square inch of every reactor fuel element is operating at the maximum allowable temperature. Reactors, unfortunately, do not naturally produce uniform fuel element temperatures, because the power is not generated uniformly. For instance, in a reactor with uniform uranium distribution, the radial and axial power is generated in a peaked fashion as illustrated. The corresponding fuel element temperature distribution shows that only a small portion of the center is operating at the limiting temperature. The average fuel element temperature might be only two-thirds of the maximum fuel element temperature. This, of course, would result in a low turbine inlet temperature even though the reactor is made of materials to withstand very high temperatures.

We have made a movie of a demonstration to illustrate one way of improving this condition. Here we see an assembly of graphite blocks. A number of neutron sources are arranged within the assembly to simulate the neutron flux that would exist in a reactor with uniform uranium distribution. Neutron flux is closely related to power density.

One of the neutron sources is seen being inserted into the graphite assembly. A neutron counter is located in the hole in the center. It will be moved through the assembly and the variation of neutron flux will be shown on a strip chart. As we said before, the neutron flux is closely related to power density.

We should expect a peaked curve as illustrated in the previous slide. The trace is approaching the center where the maximum power production occurs. For this variation of power density, the average wall temperature might be only two-thirds of the maximum wall temperature as discussed previously.

Now, the sources have been moved to simulate redistribution of uranium. We will attempt to produce a flatter power distribution by doing this. The counter is again moved through the graphite assembly. We notice already that the trace is approaching the peak power sooner. The peak, in addition, has been broadened, so that more of the fuel elements will be closer to the limiting temperature. The average fuel element temperature for this case would be increased to perhaps 85 percent of the maximum wall temperature. The turbine inlet temperature would be increased, which means that our nuclear engine will have much improved performance.

This demonstration illustrates one method of increasing the turbine inlet temperature for a given fuel element temperature. Other methods consist of variation in the coolant flows and coolant passages throughout the reactor to give more uniform temperature distribution in spite of the nonuniform power distribution.

Now that we have considered the problem of attaining high temperature, we will turn to the other problem - low shield weight. This problem will be discussed by the next speaker.

We will use a simple demonstration to review some of the basic principles of shielding and one of the well established techniques for reducing shield weight, shield shaping. We have here a model of an airplane. This source of gamma and neutron radiation will represent our reactor, located in the fuselage. The crew will be represented by radiation detection instruments located in the nose of the airplane. The neutron and gamma doses received by our imaginary crew will be indicated on the dial gages. First let us place our reactor in the airplane with no shield. We see that both gages go completely off scale, indicating a prohibitively high dose to the crew.

Now we will place some lead shielding around our reactor. You see the gamma dose is greatly reduced, while the neutron dose is virtually unaffected. By addition of material containing lots of hydrogen around the reactor, we can also bring our neutron dose under control. In this case we are using paraffin as our neutron shield. When it is in place around the reactor, and the reactor is set into the airplane, the neutron dose is greatly reduced. Greater thickness of lead and paraffin would further reduce the dose.

So far we have seen that to stop gamma radiation we require a very dense material such as lead. To stop neutrons we need something with lots of hydrogen atoms in it. We used paraffin, but other materials such as water or hydrocarbons would also work.

Our shield so far is almost equally effective in all directions. Perhaps the weight can be reduced by removing shield from behind the reactor, leaving only that between the reactor and crew. We will do this. As you see, both dose rates increase even though we have retained full thickness of both shield materials between reactor and crew. This is because radiation coming from the reactor can be reflected by structural parts of the airplane, by air molecules, and by the ground. Part of this reflected radiation gets back to the crew.

By replacing part of the shielding on the back of the reactor and thickening the shield on the front, it is possible to bring the crew dose down to tolerance with less weight than our original shield. We will, however, expose parts of the airplane to higher radiation levels due to the thin shield behind the reactor.

Over-all shield weight can be further reduced by the concept of the divided shield. This is illustrated in the next slide.

In this scheme a given thickness of shielding is removed from the reactor shield, and the same thickness added around the crew compartment. This procedure would not change the dose rate to the crew. A weight savings would result if the crew compartment were smaller than the reactor shield assembly.

Shield division and shaping represent two methods for reducing shield weight by altering the shield geometry. Further reductions might be expected by the use of better shield materials. For instance, tungsten, which is denser than lead, might be used to improve the gamma shielding. Hydrocarbons, which have a higher ratio of hydrogen atoms per total weight than paraffin, could reduce the neutron shielding. The gains are not spectacular however.

Both shield tailoring and the divided shield concept, which we have used to reduce the shield weight of our airplane, introduce problems due to the high levels of radiation to which aircraft structure and equipment is exposed. Radiation, we know, can cause changes in the properties of materials called radiation damage. We will use an alpha beam from the NACA cyclotron to demonstrate radiation damage. The next slide is a photograph of the NACA cyclotron. The beam of alpha particles emerging from the machine travels down this tube, through a six foot thick concrete wall, into the beam room. In the movie sequence you see a crystal of cesium iodide inserted into the beam. This is the end of the beam tube you saw in the previous slide. The crystal glows, indicating that its atoms, which are being bombarded by alpha particles, are excited.

If the crystal is left in the beam for several minutes, permanent discoloration will take place. The next slide shows the results of leaving a sodium chloride and a potassium bromide crystal in the beam for several minutes. The middle crystal is undamaged sodium chloride. Permanent coloration of these crystals is shown, indicating a change in structure.

The mechanism of the discoloration process is the same as the process which produces changes in the strength or ductility in structural materials.

Another problem resulting from the interaction of radiation and materials is that of activation. When neutrons collide with the atoms of shielding materials or structural materials, reactions can take place which make these materials radioactive. This, of course, complicates the shielding problem because additional shielding thickness may be required to stop this secondary radiation. Also, activation of structural materials outside the shield makes maintenance and ground handling of the airplane more difficult. These effects are especially annoying if the activated materials retain the radioactivity for long periods of time. That is, if they have a long half-life. There is a continuing need for fundamental work to determine the probability of reactions between radiation and materials, the type of secondary radiation emitted, and the half-lives of the induced activities.

Activation is illustrated in the next movie. A piece of molybdenum is inserted into the cyclotron beam operating at very low power and held there for a few seconds. It is moved into a very sensitive counter which measures gamma activity. The operator is perfectly safe in handling this specimen because of the low activity induced by the low beam power and short irradiation time. In this case, the strip chart shows a fairly rapid decay of activity. We are studying these problems to determine whether any given material will cause an activation problem if it is used in a nuclear airplane.

This completes our discussion of the shielding problem. The next speaker will discuss two topics: first, some of the nuclear engines other than the direct air cycle turbojet, and second, the NACA's contribution to the national aircraft nuclear propulsion effort.

The previous speakers have discussed various aspects of the problems facing nuclear propulsion. They have considered only the simplest nuclear engine, the direct air cycle turbojet. Other nuclear propulsion schemes are feasible. For example, the closed cycle turbojet shown on this chart attempts to reduce reactor size, and hence shield weight, by using a better heat transfer medium to remove reactor heat. The heat is transferred to the air of a turbojet cycle by means of a heat exchanger. Two types of coolants of interest are liquid metals and high pressure inert gases. Because of the corrosiveness of liquid metals, this system is limited to lower temperatures than the direct air system, which tends to offset the advantage of reduced shield weight. The use of inert gas permits high temperature operation without corrosion. However, we now have an added weight problem because of high pressure piping and heat exchangers.

The systems just described represent methods for using nuclear energy in turbojet engines. Other air breathing engines, such as the turbine-propeller engine or the ramjet, could be used. It is also possible to use nuclear energy for a rocket. The next slide shows a nuclear rocket. A gaseous propellant is heated in a nuclear reactor and ejected through a nozzle. The propellant is stored in liquid form in a propellant tank and pumped through the reactor. Up to this point we had been considering manned aircraft. For missile applications, the shielding problem is less restrictive but it is still present in that many of the missile components must be protected from radiation damage.

We have seen some of the problems which make the realization of nuclear flight very difficult. The two major problems common to all nuclear systems are the attainment of high temperature and low shield weight.

There are several approaches which research can take to increase our understanding of the problems and to provide information for the solution of these problems. Materials Research will strive for higher temperature materials.

Heat transfer and fluid flow research will enable us to operate closer to the limiting temperatures and make more effective use of the materials available. Heat transfer research is currently being done with high temperature materials such as Mo, W, Rh, and C. It is necessary to determine how the radiations emerging from partially shielded reactors are scattered and captured, in order to refine the principles discussed in the previous shielding demonstration. To supply fundamental information on these radiation effects on materials, the NACA has just put into operation the 60-inch cyclotron you saw earlier.

To illustrate the information required from reactor research, let us suppose we had a promising new fuel element that we wished to test. That is, we would like to expose this new fuel element to the combined effects of actual internal heat generation and temperature distribution, radiation damage, and coolant flow. We could build a full size reactor out of the new fuel elements, but this would be hazardous and costly. Another approach is to place the new fuel element into an environment similar to that which would exist in a full size reactor made up of the new fuel elements. To provide this environment a reliable research reactor with test holes for placing the fuel element is required. Several such reactors exist or are in construction.

To augment and expand our research efforts, Congress has appropriated funds for the NACA to build such a research reactor near Sandusky, Ohio. The next slide shows a cross section through the main reactor building. The water cooled reactor indicated by the red area is located in a pressurized tank about 9 feet in diameter. The tank is located in the center of a water pool 70 feet in diameter. A containment tank 100 feet in diameter completely encloses the pool and reactor tank. The next slide shows a horizontal cross section through the reactor. The reactor is indicated by the rectangular area in the center. It provides neutron and gamma intensities around it, comparable to that found in aircraft reactors. Experimental fuel elements with their own cooling systems are inserted into the horizontal through holes. They can be cooled with air, inert gases, liquid metal, or whatever is desired.

The thermal column to the right slows down neutrons leaving the reactor by means of the graphite located here. The slow or thermal neutrons travel down the hole to a plate which contains uranium-235. The thermal neutrons produce fissions and so fission neutrons and gammas are produced at a point which is convenient for full scale aircraft shield tests. Aircraft type shields can be placed around this source plate and the attenuating characteristics determined.

The beam holes to the left supply high intensity neutron beams for fundamental nuclear physics investigations. Many other holes are available for irradiating materials to study their characteristics in the presence of high intensity gamma and neutron fields. This reactor will be ready for operation sometime in 1959.

This ends our discussion of the aircraft nuclear propulsion except for one important observation. Whether one is an optimist or a pessimist about nuclear flight, the ultimate potential is sufficiently great that unrelenting efforts must be made to attain it.

NACA

C-46137

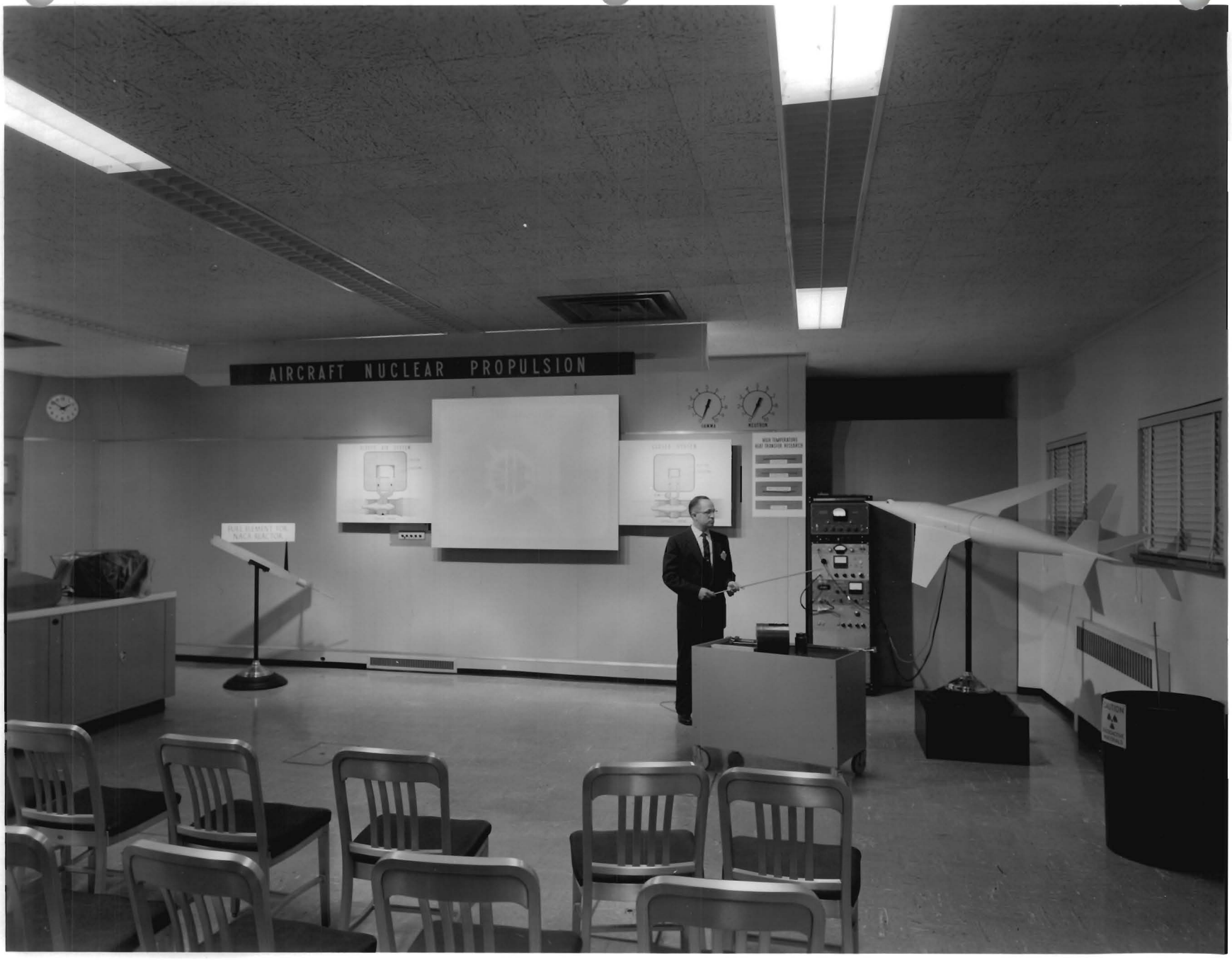
AIRCRAFT NUCLEAR PROPULSION
GAMMA
NEUTRON
HIGH TEMPERATURE HEAT TRANSFER RESEARCH
FUEL ELEMENT FOR NACA REACTOR

NACA

C-46139

NUCLEAR PROPULSION RESEARCH
NACA REACTOR FACILITY
CLOUD TRACKS FORMED by ALPHA PARTICLES EMITTED by DECAY of URANIUM

NACA
C-16019

CLOSED SYSTEM

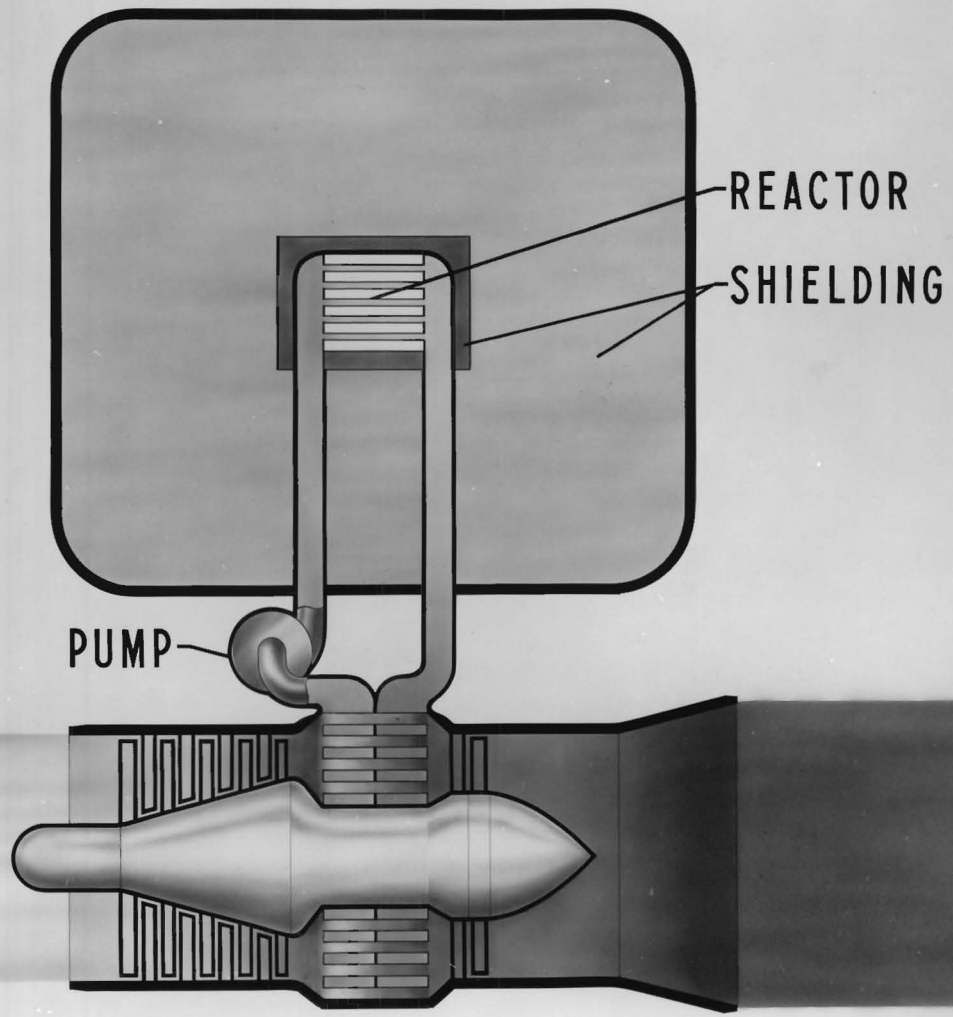

TURBOJET ENGINE

NACA
C-46020

DIRECT AIR SYSTEM

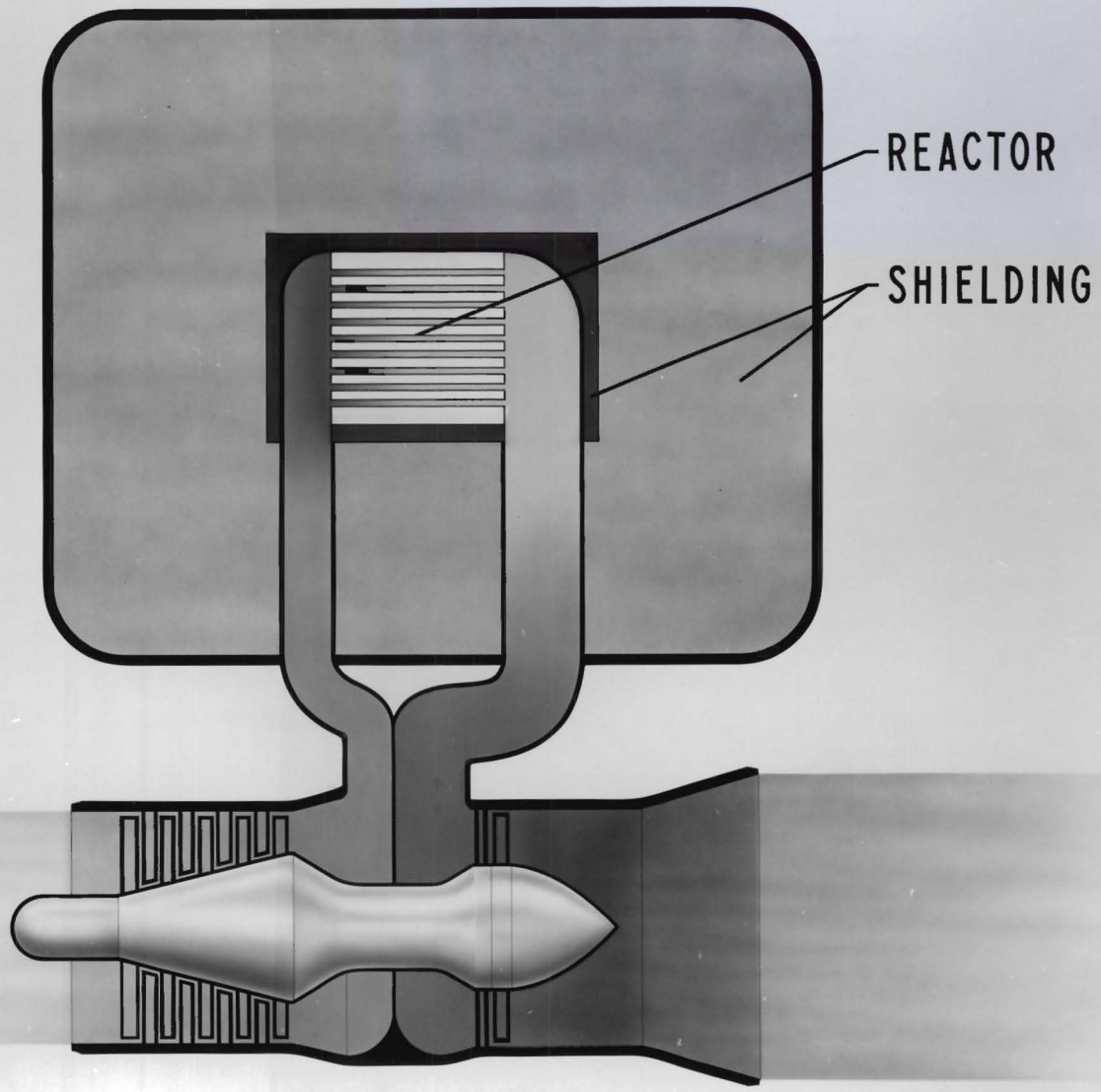

TURBOJET ENGINE

NACA
C-10099

TEST FACILITIES

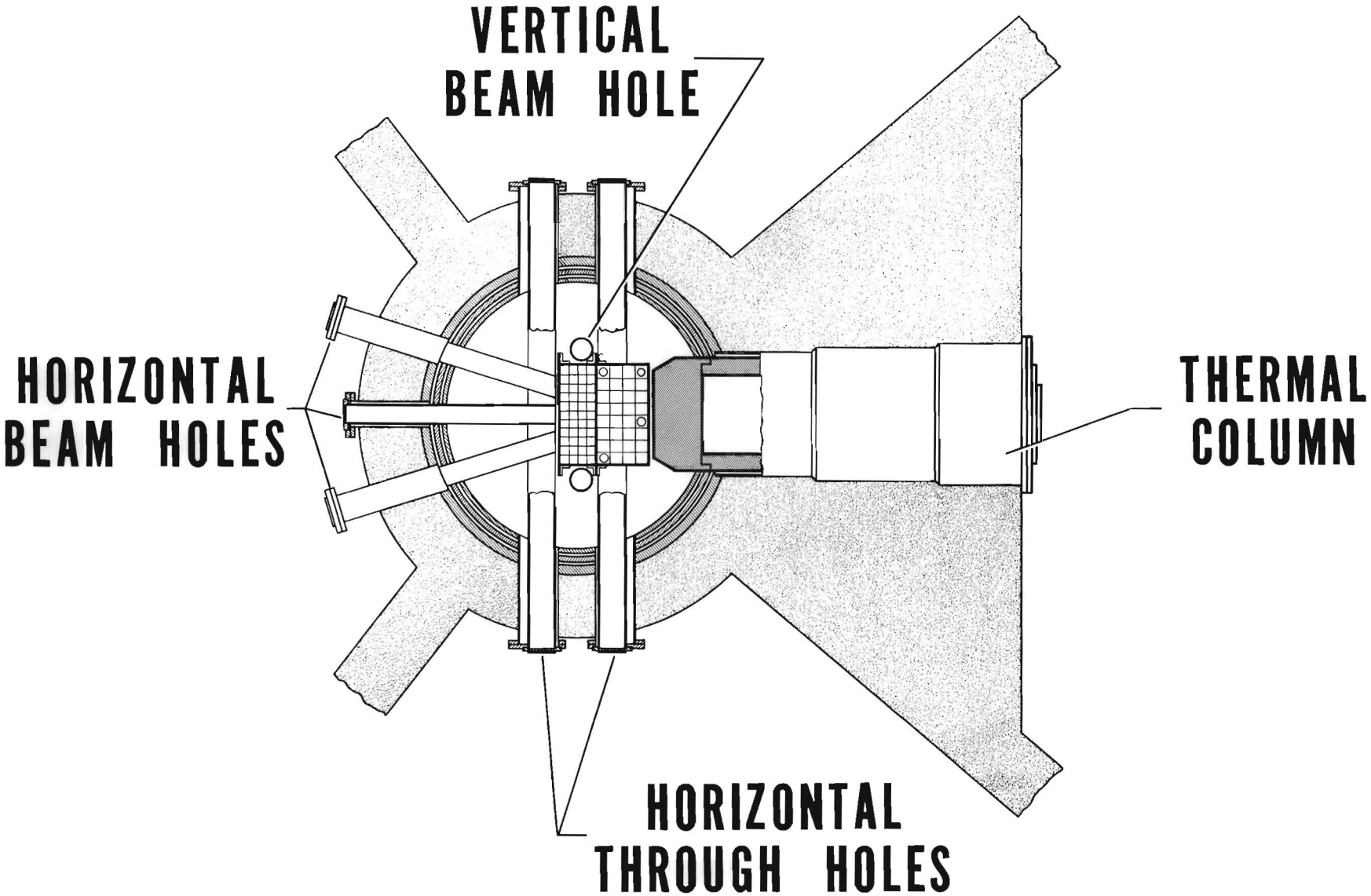

NACA
C-16100

REACTOR BUILDING

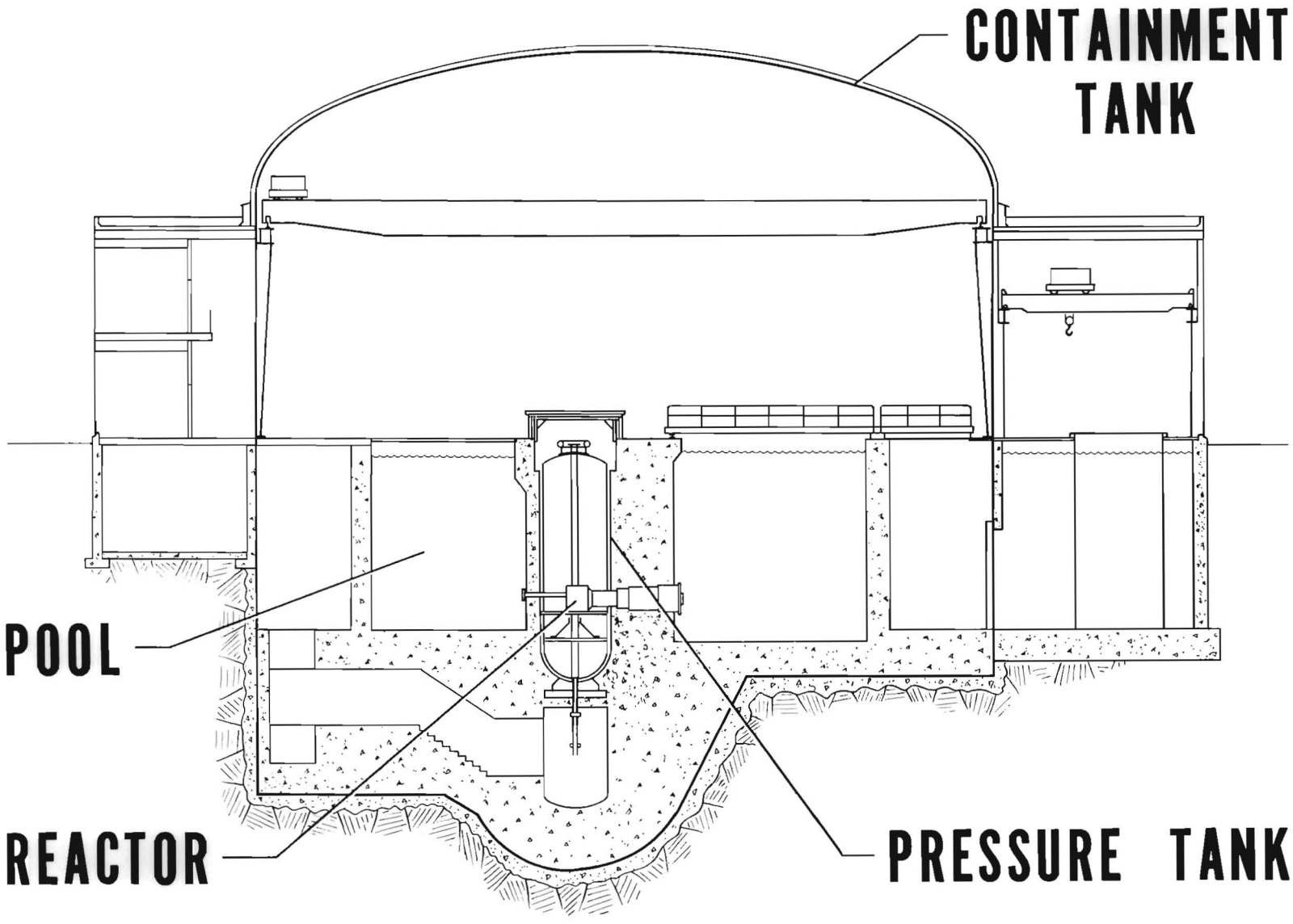

NACA
C-46201

NUCLEAR ROCKET

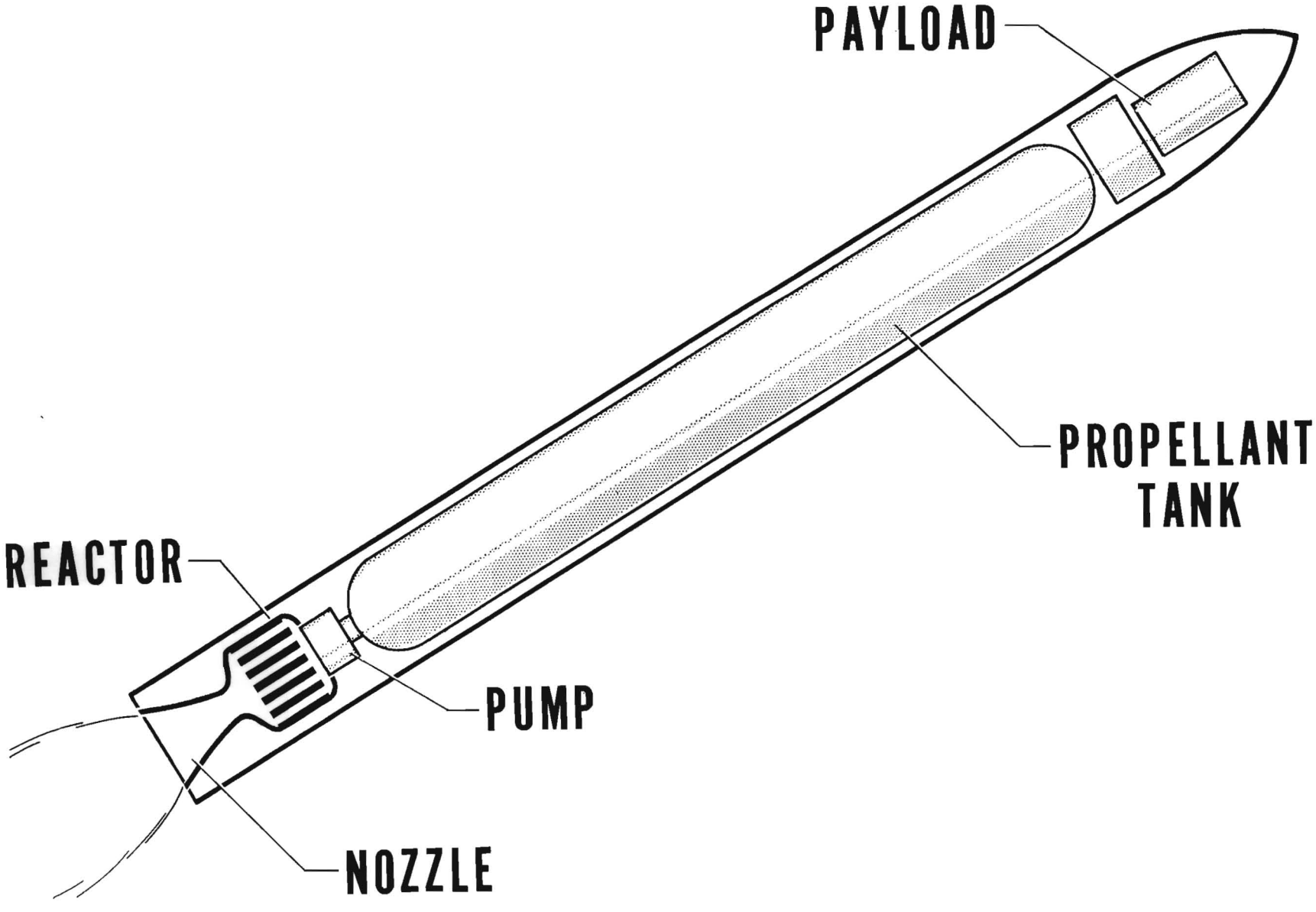

NACA
C-46102

DIVIDED SHIELD

CREW SHIELD

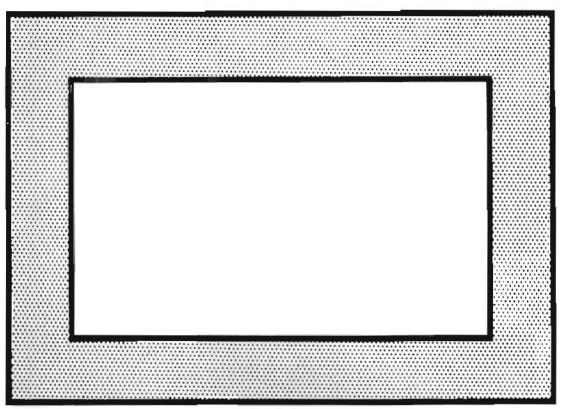

REACTOR SHIELD

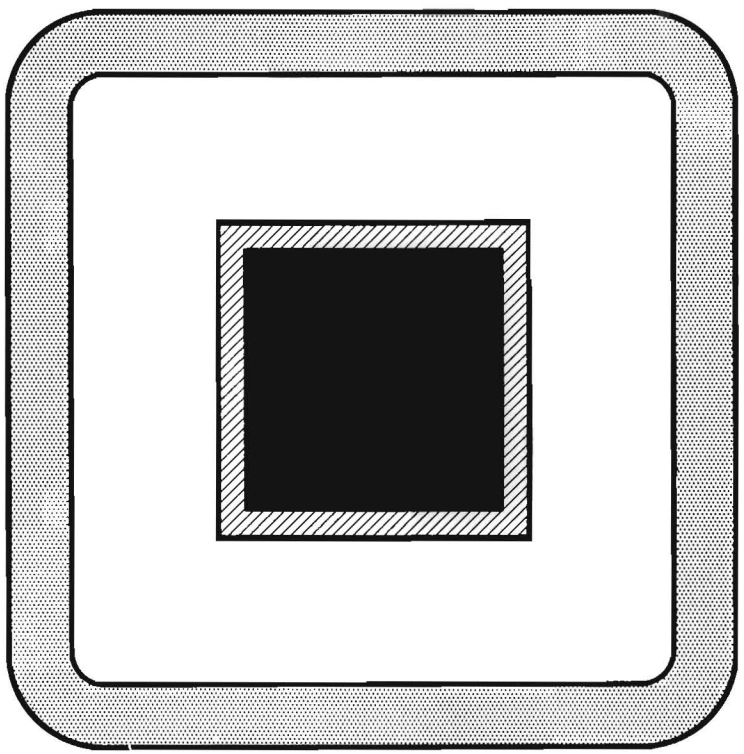

C-46

SHAPED SHIELD

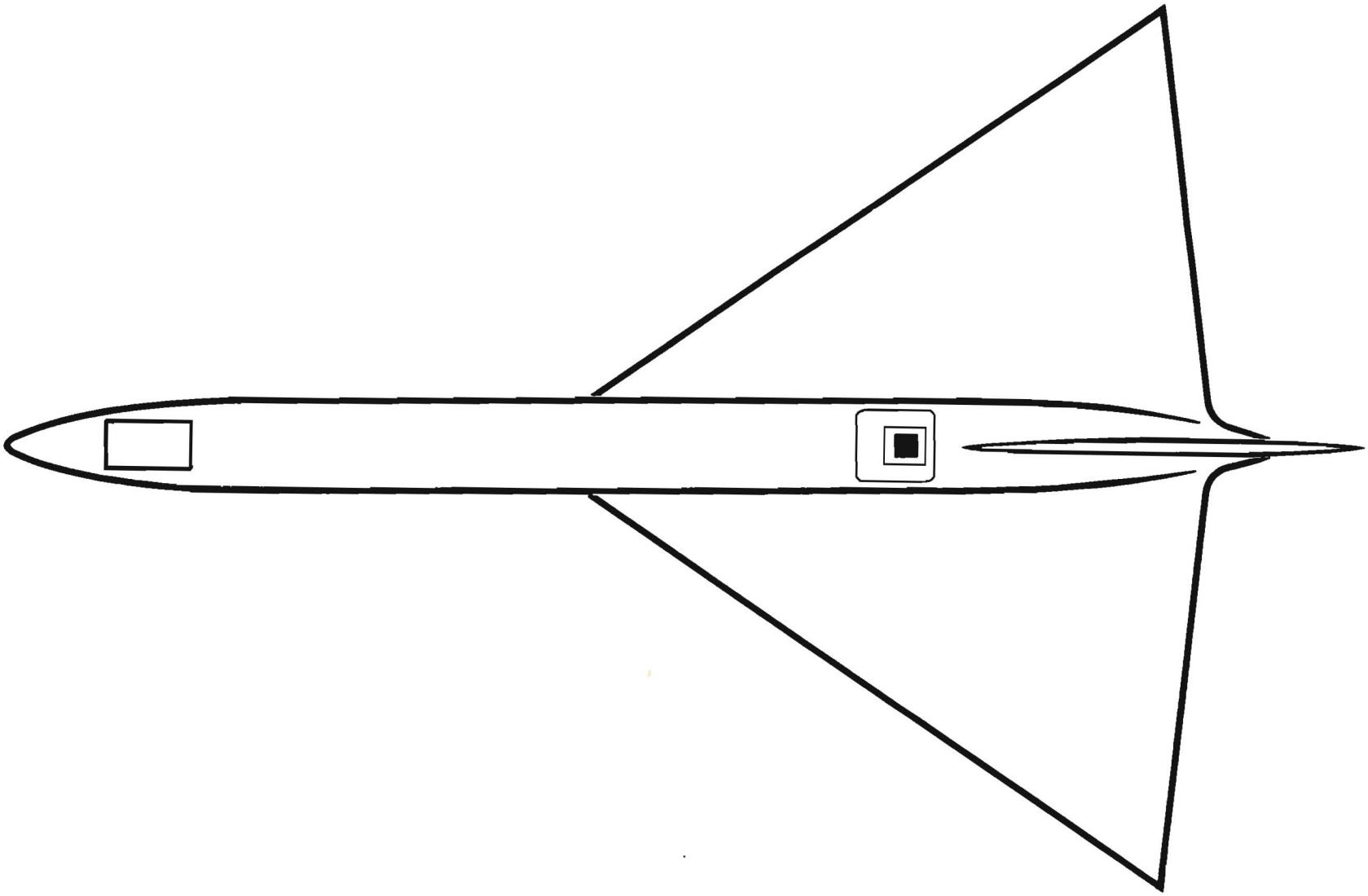

NACA
C-[illegible]04

POWER AND TEMP. DISTRIBUTION

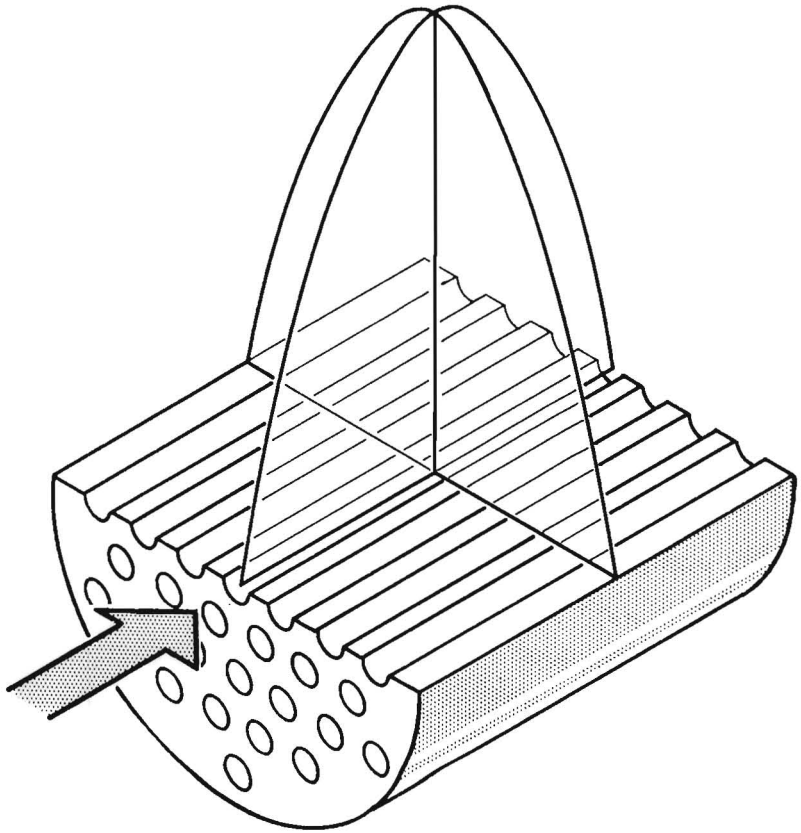

POWER

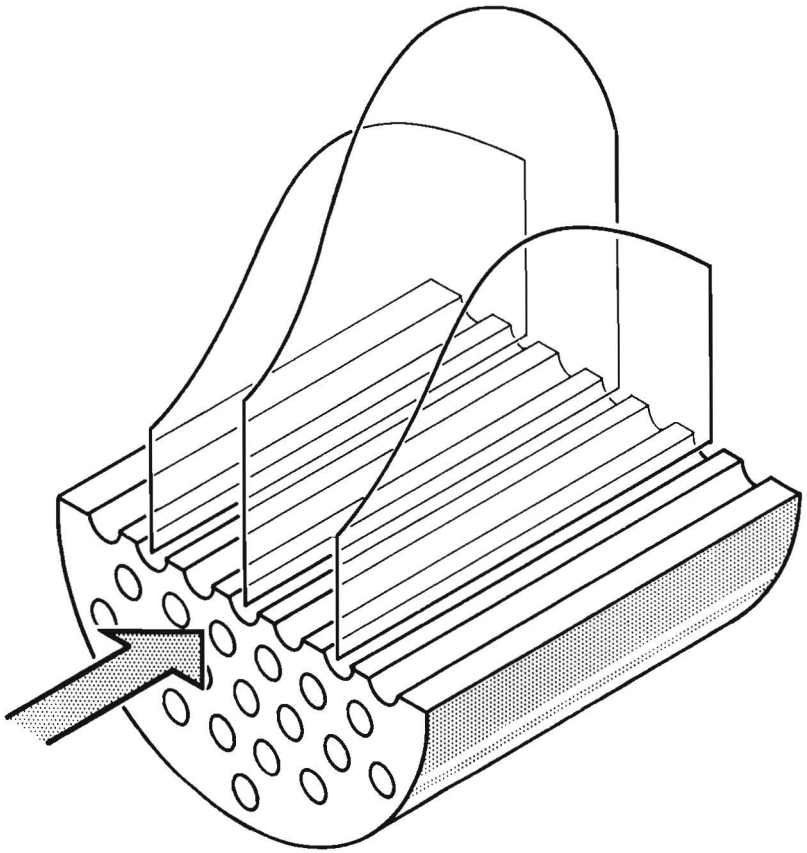

TEMPERATURE

NACA
C-16105
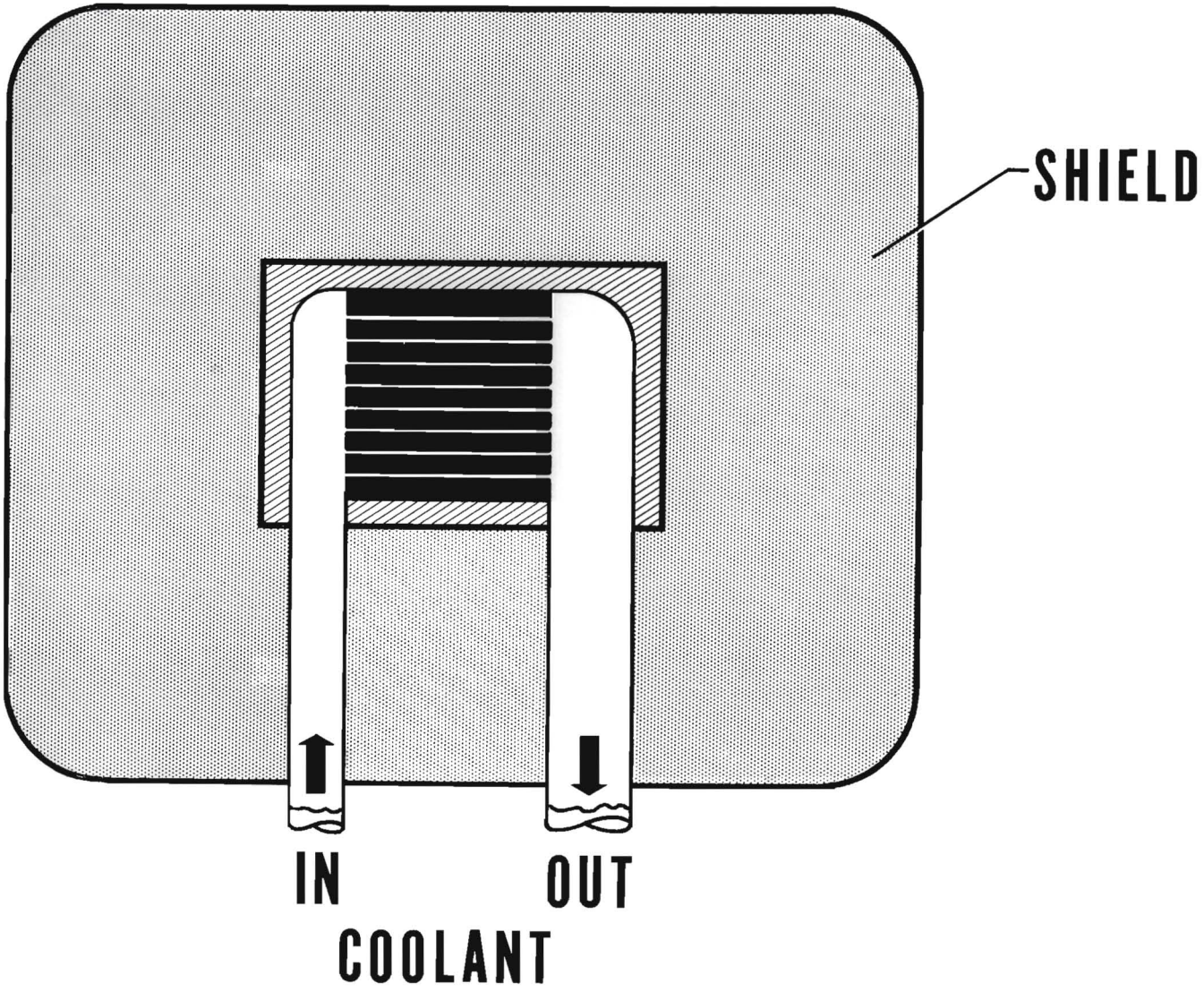
REACTOR