Low-Speed Characteristics of High-Speed Plan Forms

By Ernst F. Mollenberg and Stanley Lipson
Author: Robert H. Neely

Presented at Full-Scale Tunnel

LAL 1951 Biennial Inspection

The Langley Full-Scale Tunnel is a large-scale, low-speed test facility in which both helicopter and wing research is conducted. The tandem helicopter, which you saw as you came in, is one of a group of configurations to be studied in a general helicopter investigation. At one of the other facilities that you will visit later today, a detailed presentation will be given of some of the more pertinent results of the NACA's helicopter work, so we will say no more about helicopters at this time. The thick high-aspect-ratio wing in the corner is being used in a study of boundary-layer control for long-range aircraft. Tests of this wing have not yet begun.

What we want to discuss here is some of the NACA's work on the landing-speed characteristics of sweptback wings. These characteristics have been the subject of considerable research in all of the NACA's large-scale wind tunnels. Representative plan forms of wings which have been tested are shown on this panel. We have tested a considerably larger number of wings than shown here and have made several types of tests on each wing. On this wing, for example, we have studied flow characteristics, lift and drag characteristics, longitudinal stability with and without a tail, lateral stability, and lateral control. We have been able to generalize our test results so that reasonable predictions of some of the low-speed characteristics can be made for wings of this type. I would like to review these generalizations regarding flow phenomena, maximum lift, and longitudinal stability.

1951 BI
F.S.T.
Mollenberg
Lipson

With regard to the flows associated with the stall phenomena, it is well known that the stall of these wings is characterized by initial flow breakdown at the tips - or tip stalling; however, the precise nature of this tip stall may be different for different wings. The flow phenomena may be classified into two predominant types. These two types of flow are illustrated by diagrams in this chart. Down here, the pitching moment is plotted against the lift. The circled points represent conditions corresponding to the flow diagrams. Let us consider the flow over this wing (left side), which has a round-nose section of moderate thickness. The spanwise flow near the wing surface causes the boundary layer to build up along the rear part of the wing near the tip. With increasing angle of attack, this region of low-energy air expands until eventually the tip sections stall out. For this wing, the pitching moment is zero up to high lifts, which means that the lift is equally disposed about the center of gravity (point to line). When the tip stalls, lift is lost at the rear part of the wing. As a result, the nose pitches up and the airplane goes even further into the stall. This means that the wing is unstable. If the aspect ratio is large, that is, if the wing is long and slender, the build-up of the boundary layer will cause this nose-up moment to develop at lower lifts; that is, the moment curve will start swinging up sooner.

In the case of thin wings or wings with small leading-edge radii, a different type of flow is encountered. This flow is illustrated here for a sharp-nosed wing (right) having the same plan form as this wing (left). At fairly low angles of attack, the flow separates around the leading edge and then reattaches to the wing surface. Within this separated region, a vortex is formed which lies along the leading edge and trails off over the tip sections. As the angle of attack and lift increase, the vortex moves inboard as shown in this diagram. Outboard of the vortex, the wing is stalled. Over the area occupied by the vortex there is an increase of lift. Therefore, when the vortex passes over the tip sections, the lift behind the center of gravity is increased so that a nose-down moment is obtained. When the flow is as shown here, the decreased lift due to stalled flow and the increased lift due to the vortex cause the resultant lift force to move ahead of this line, which results in the nose-up moment shown here. Both wings exhibit this undesirable nose-up moment change. However, it should be noted that the wing with vortex flow also shows this large nose-down moment change which may be undesirable. It is important to know what

type of flow is occurring on a wing. The type of flow affects other characteristics besides the pitching moment and determines the line of approach to be followed in improving the wing characteristics.

In order to help you visualize these two types of flow, we will now show a short movie illustrating the flows by means of tufts. The first part of the movie shows the flow over the wing on the left.

Start movie.

$\alpha = 12.7$-----This angle of attack is well below the stall. The camera is first focused on the left wing tip, and it will gradually move over to the right. The direction of the airflow is down. At this angle, the flow is smooth but there is a slight lateral flow of the boundary layer near the trailing edge.

$\alpha = 18.0$-----This angle is a half degree below the stall. Here, the cross flow is very severe and extends over a considerable part of the chord, particularly at the tip.

$\alpha = 18.5$-----At this angle, the wing is stalled as indicated by the violent behavior of the tufts. As we go to the right panel, note that the tip is first unstalled and then stalled.

We will now show some flow studies on a wing which has the vortex type of flow at an angle of attack where the vortex has moved considerably inboard of the tip. For this case, a single tuft attached to a probe is used because surface tufts would not indicate the phenomena adequately.

Here, the path of the vortex across the wing is traced. The tuft whirls rapidly when it is at the center of the vortex. Now, a traverse is made straight across the wing to show the different regions of flow. Here, we start further back. The tuft is in the region of the vortex. Note that there is a secondary vortex. Now, we make a traverse still further back. Note that the vortex center is well defined. Finally, we retrace the path of the vortex. Development of vortices downstream of a wing will be shown at the 7- by 10-foot tunnel later in the day.

1951 BI
F.S.T.
Mollenberg
Lipson

It is possible to predict on what wings these flows will appear. The basic parameters that determine the flow are the wing nose radius and sweep angle. On this slide we have plotted an empirical boundary curve as a function of the sweep angle and nose radius. Increasing nose radius is up and increasing sweep angle is to the right. In this region the stall tends to build up from the rear; in this other region the vortex flow is obtained. Near the boundary, both types of flow may appear on a given wing. It can be seen that the vortex flow occurs for a greater range of nose radii as the sweep angle increases.

The airfoil nose radius and sweep angle also have an important effect on the maximum lift. In this slide the maximum lift is plotted against the sweep angle for sharp- and round-nose airfoil sections. The sharp-nose airfoil has a low maximum lift at zero sweep, but it increases as the sweep increases. The upper curve represents, roughly, the maximum measured lifts for round-nose airfoils. A greater lift is obtained at zero sweep, but the lift decreases as the sweep increases.

The maximum lift values shown on this slide are not necessarily usable values because of the longitudinal instability near the stall that was shown on the first slide. For a large number of swept wings, this instability at high angles of attack poses a fundamental problem. The approach consists of controlling the flow over the wing. On this slide are shown the various methods of controlling the flow that we have investigated. The devices are shown mounted on a semispan wing (Point to bottom configurations). Enlarged sections through the wing nose are shown in some cases. Shown here are:

1. a Krueger type leading-edge flap,
2. a slat,
3. a single suction slot located near the leading edge,
4. area suction through a porous material,
5. a droop-nose flap,
6. a fence,
and 7. a leading-edge chord extension.

A considerable amount of research has been conducted, from which a number of important principles have been determined to aid in the selection and design of the devices. It has been found that the type of flow over the basic wing influences the choice and design of the device, as shown, for example, on these two models. These two models were tested in the 19-foot pressure tunnel. For this wing (left), which has the vortex type of flow, we were able to obtain satisfactory stability by using this simple chord extension. On this wing, which has the other type of flow, a leading-edge slat and fence were employed. The fence was used to minimize the bad effects of the spanwise boundary-layer flow.

In conclusion, our position regarding the low-speed characteristics of sweptback wings is that we possess a working knowledge of the flows, know the aerodynamic properties of a large family of wings, and have a large amount of basic aerodynamic information needed for the improvement of certain characteristics.

LAL 70621

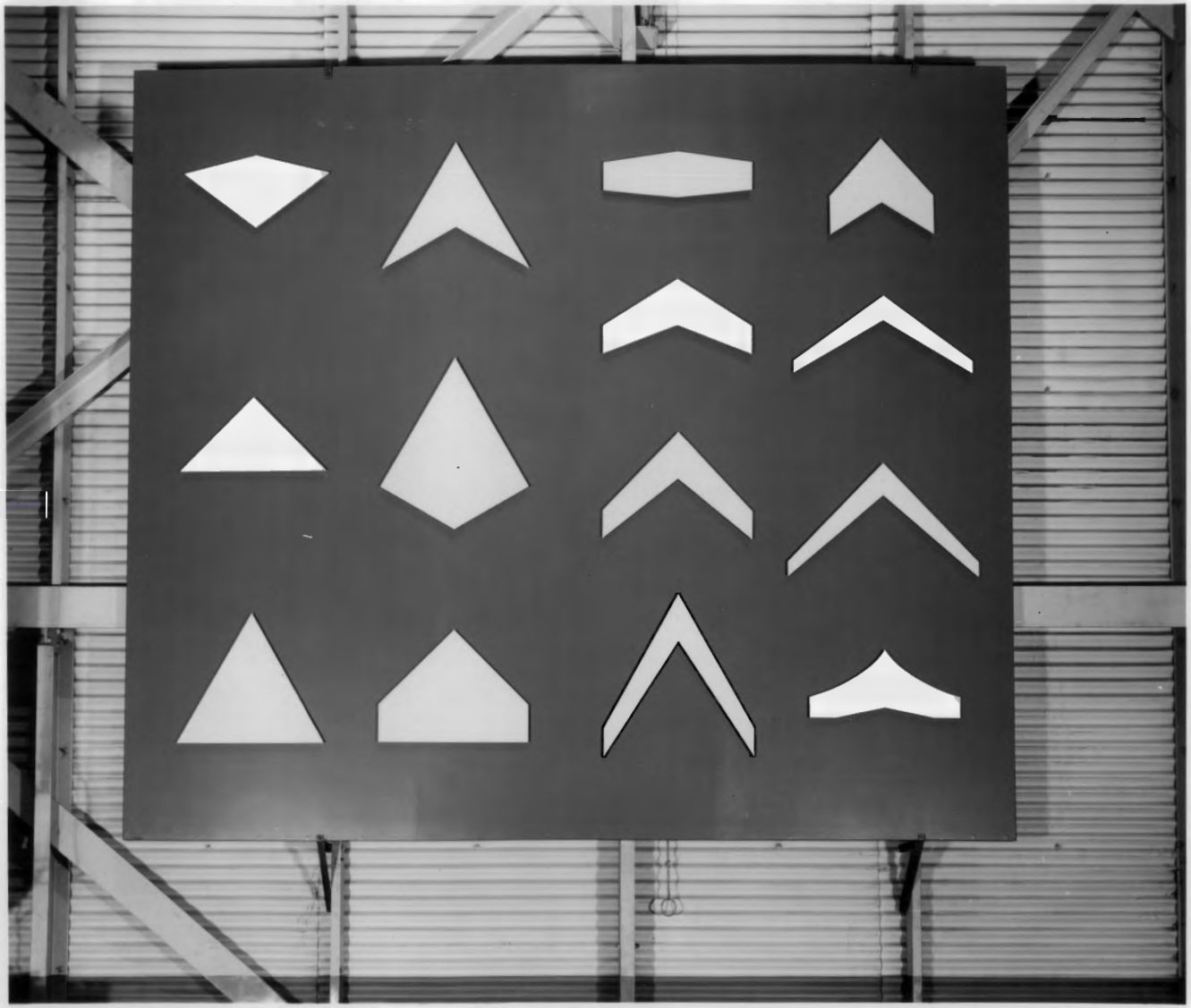

NACA

LAL 70622

FLOW CONTROL DEVICES

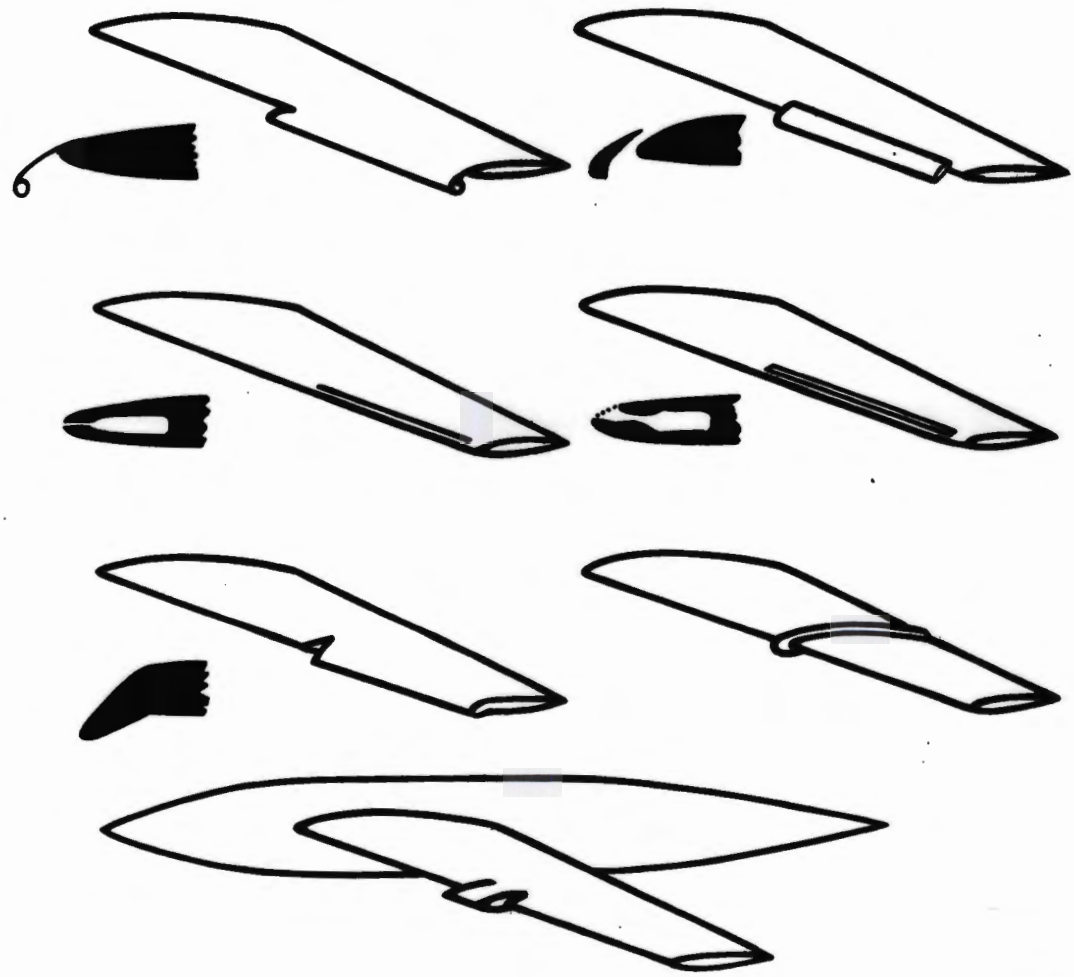

NACA

NACA
LAL 71092

TWO TYPES OF FLOW

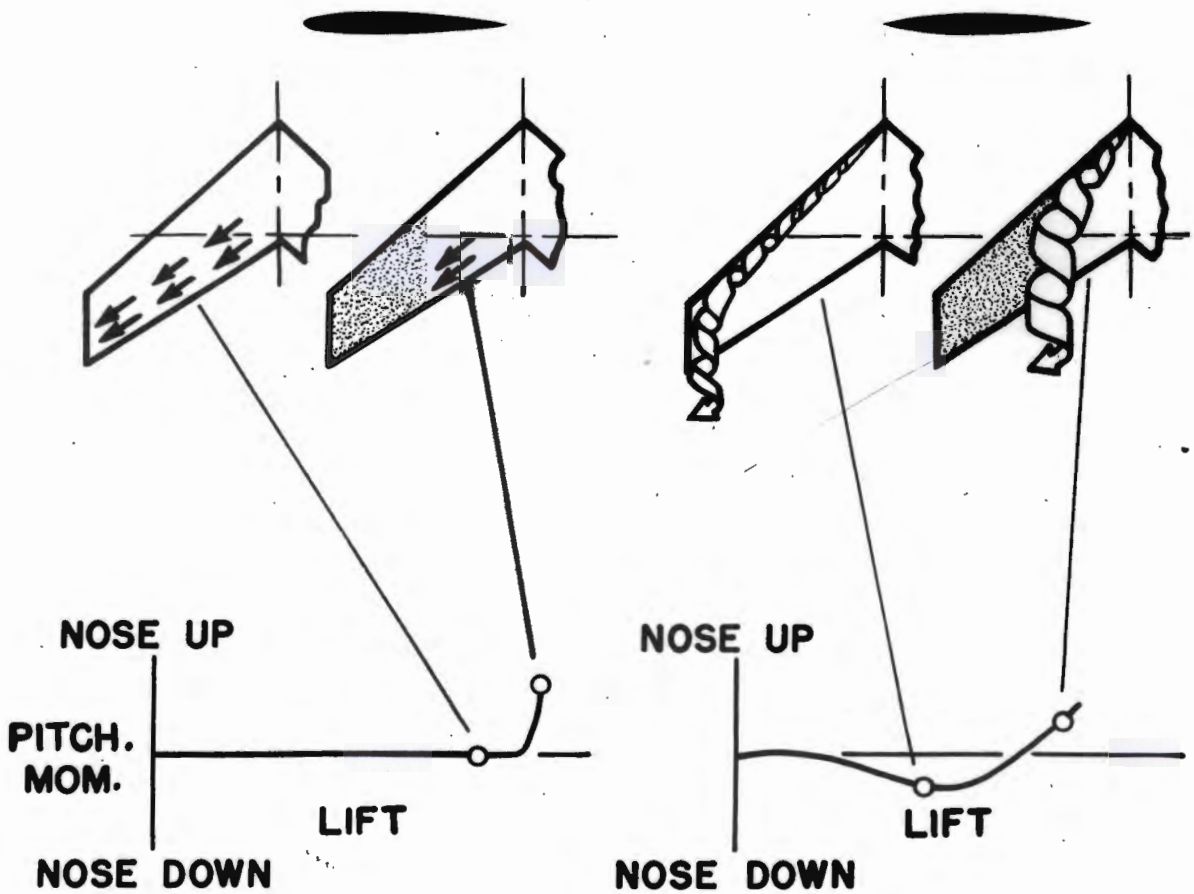

NACA

NACA
LAL 71093

NOSE RADIUS AND SWEEP AFFECT MAXIMUM LIFT

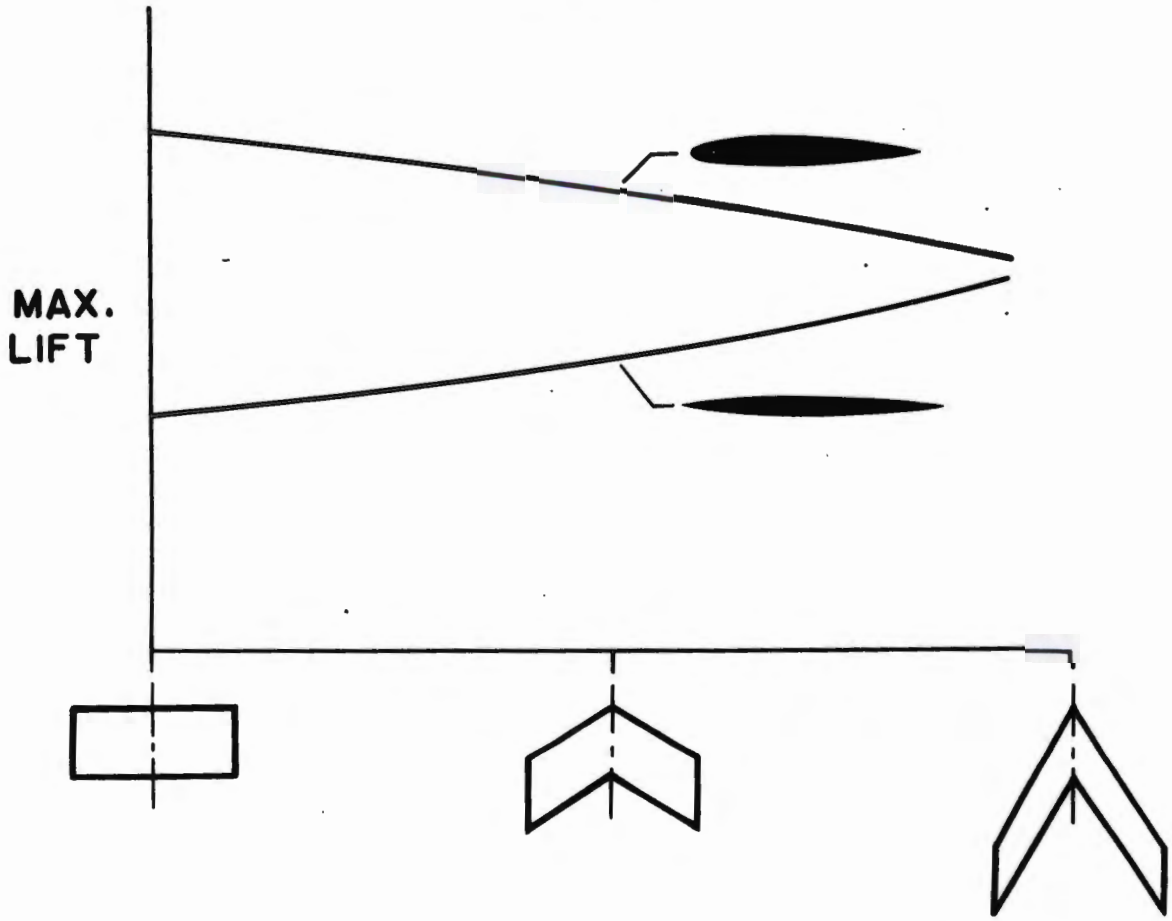

LAL 71094

NOSE RADIUS AND SWEEP DETERMINE FLOW

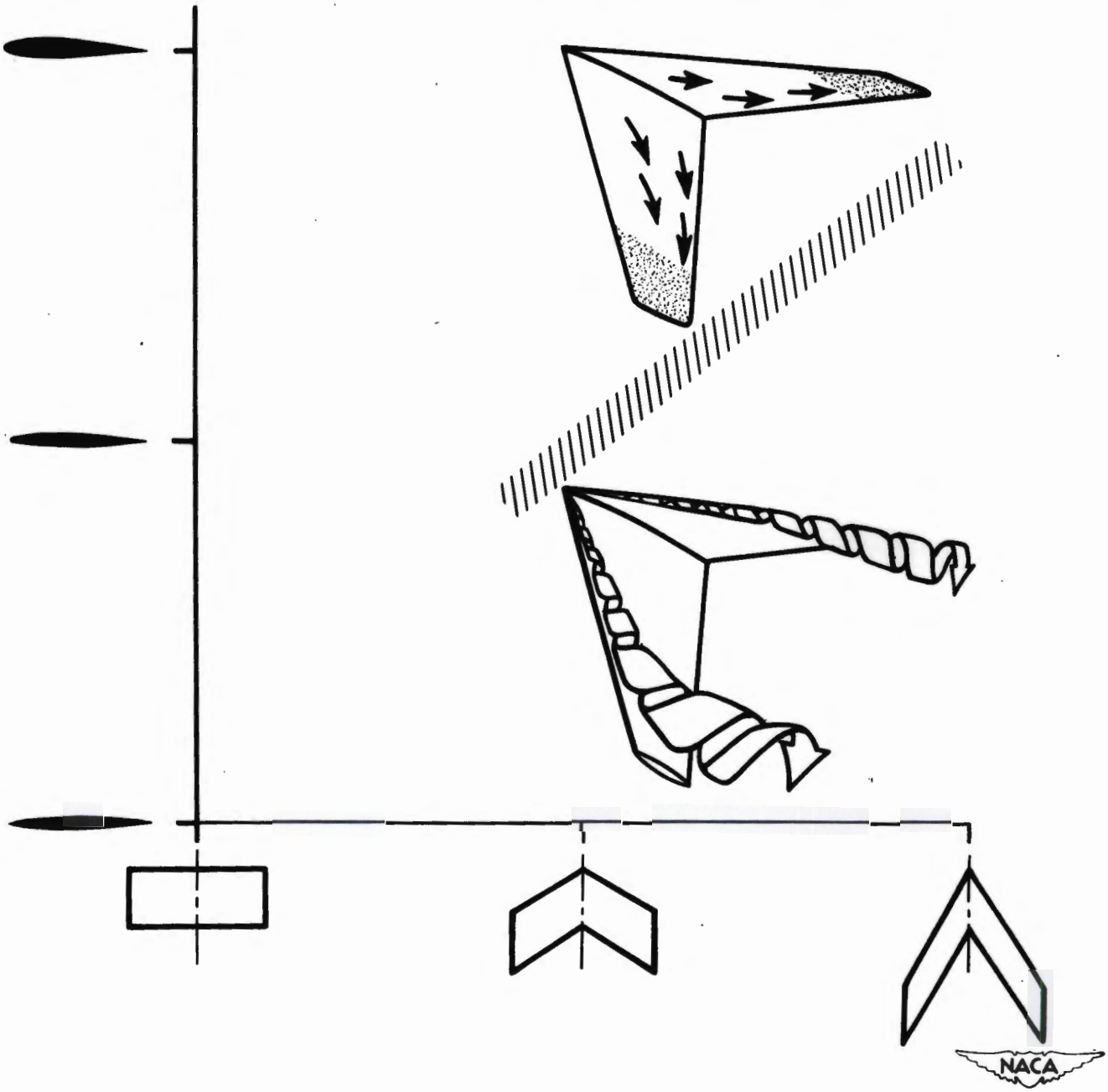

LA L 71095

1951 MAY INSPECTION

Vibration and Flutter Branch

PROPELLER FLUTTER

by John E. Baker and A. B. Rainey

I. INTRODUCTION

At this location we are concerned with many types of dynamic problems involving oscillatory phenomena. Our program today will consist of three talks which are concerned with various aspects of the flutter problem. The talks will deal with propeller flutter, oscillating air forces, and dynamic models.

I would like to discuss first, propeller flutter.

II. FLUTTER OF THIN PROPELLERS

Propeller flutter has been recognized as a problem since World War I. Early investigations of propeller flutter indicated that making blade sections thicker was one of the most effective ways to relieve the problem. Thick sections could then be employed without significant aerodynamic losses since these propellers were not required to operate at high speeds. For propeller-driven transonic aircraft, however, propellers must have thin blade sections in order to obtain good aerodynamic performance. As a consequence, propeller flutter has now become a critical factor in the design of these thin propellers. I have here two of the simplified test models used in studying the flutter of blades having thin sections.

It may be of interest to give a laboratory demonstration of propeller flutter, which some of you may have seen before. A flashing light illuminates the blade tip at a given point in each revolution. In addition to the sound accompanying flutter, you may observe the flutter visually by noting the image of the white blade tip in the mirror. Note that this type of flutter occurs primarily as a torsional oscillation. The flutter you are about to see on this model will not be destructive.

Demonstration (see Appendix)

It may be mentioned that the flutter problem is also of importance for compressor and turbine blades, for which similar phenomena to propeller flutter have been encountered.

A few technical aspects of the propeller flutter problem can be illustrated with the aid of this chart. The ordinate is the flutter speed in terms of tip Mach number, and the abscissa is a flutter parameter which contains the physical properties of the blade, chord and the torsional frequency, and also the speed of sound of the test medium. The areas

enclosed by the curves indicate flutter regions at high angles-of-attack and at low angles.

For a given propeller the chord and torsional frequency are fixed and, if the speed of sound is held constant, the operating conditions of the propeller are represented by a vertical line. Propeller blades having values of the flutter parameter in this lower range, having rectangular planform blades and thin sections would look like the left hand propeller. The blade mounted on the stand would fall about here (about half way to first line). Making the chord greater would increase the value of the flutter parameter, and shortening the blades raises the torsional frequency which also raises the flutter parameter. Blades having the same percentage thickness as the left hand propeller, but with values of the flutter parameter in this range (larger value line) would look like the right hand propeller.

Propellers must operate over a wide range of conditions. In normal flight the blades operate at low angles-of-attack where the flutter region is very small. However, during the take-off the blades operate at fairly high angles-of-attack where the flutter region is considerably expanded and flutter speeds are lower.

Our experimental studies of propeller flutter, at high speeds showed a beneficial effect of Mach number, in that, the flutter boundaries turn back rather than continuing as straight lines. Although this upper portion of the flutter boundary is not fixed as yet, there is considerable experimental evidence that it exists in the manner shown here. This aspect of the propeller flutter problem is being studied further. The turning back of the flutter boundary makes it possible to design blades

having thin sections that will be completely free of flutter, and such a blade is indicated by the right hand propeller. It can be seen that the line representing this blade does not come in contact with the flutter region at any operating condition.

A propeller such as this one on the left could also be used without encountering flutter by means of proper programming of operations. For instance, this propeller could be brought up to speed at low angles of attack without fluttering, since its operating line does not intersect with the flutter region. Then the angle-of-attack could be increased to the high values necessary for the take-off without causing the propeller to flutter, since the operating condition is still outside the flutter region. Of course, the opposite procedure must be followed in stopping the propeller if flutter is to be avoided.

Thus two ways of circumventing flutter on thin high speed propellers have been mentioned. One, build blades such that flutter will not occur at any operating condition (right hand propeller), and, two, program the operation of blades that could flutter in such a way as to avoid the flutter regions. Although I have indicated methods of avoiding flutter, there may be aerodynamic and structural problems as well as other vibration problems, that must be considered before such propellers can be used successfully.

Mr. Martin (or substitute) will now speak on oscillating air forces.

NACA

LAL 70555

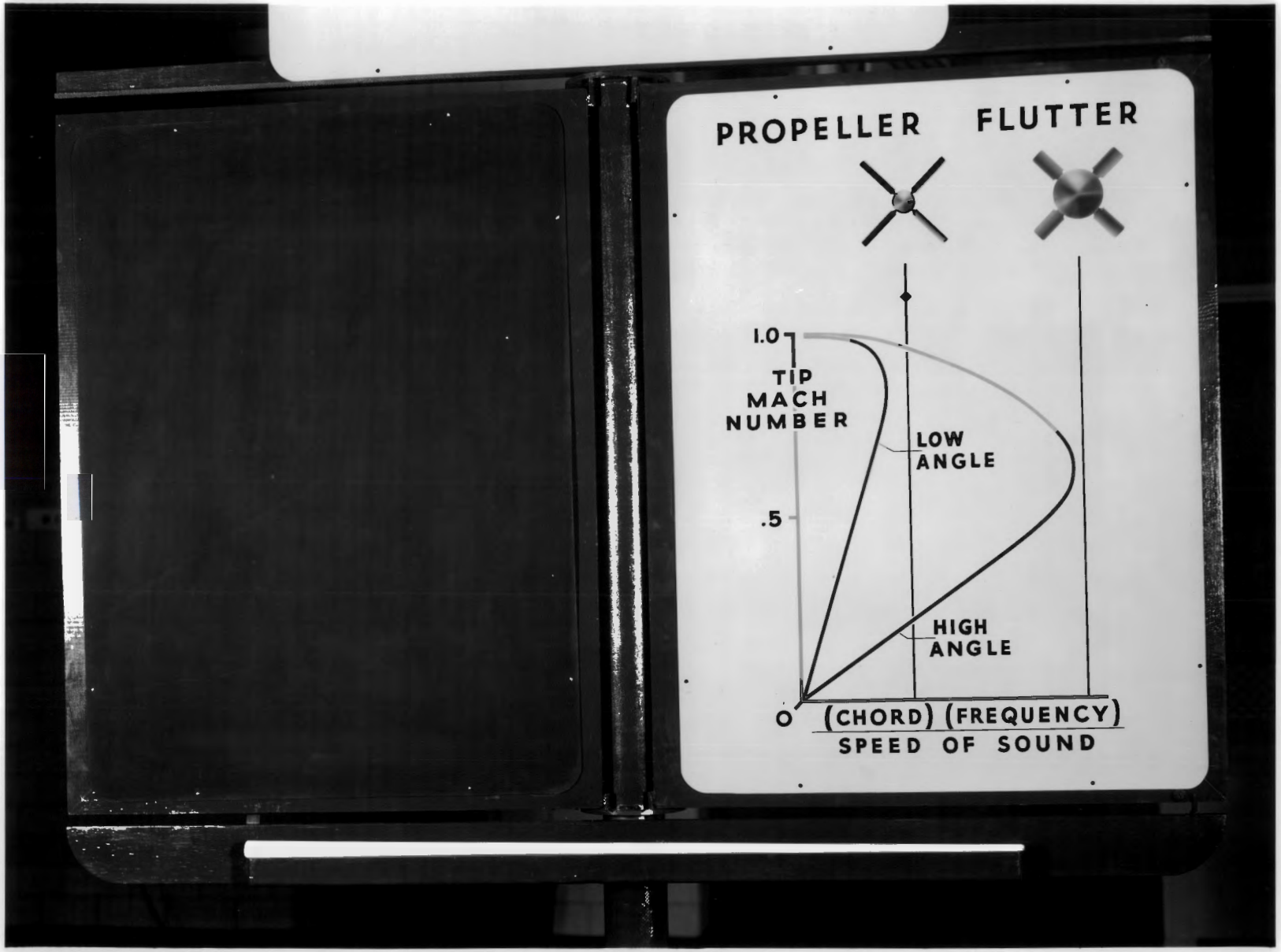

NACA

LAL 70558

1951 BI
V and F LAB
Martin

1951 MAY INSPECTION

Vibration and Flutter Branch

OSCILLATING AIR FORCES

by D. J. Martin, J. A. Clevenson, E. Widmayer, and D. J. Woolston

You have just seen some propeller flutter. There are many types of flutter that are encountered on aircraft, propellers, turbines, helicopters, etc., and there are many speed ranges and conditions in which the phenomena are different. In order to calculate the critical conditions for any of these flutter phenomena it is necessary that we know many parameters, both aerodynamic and structural. I would like to talk mainly about the aerodynamic quantities that we need.

Some of the aerodynamic quantities can be illustrated in this chart. The information for this chart has been calculated for a wing that would be oscillating many times a second at a certain forward velocity. The wing is oscillating in pitch about the midchord and its angular position is plotted against time and is shown by the heavy solid line. Now for comparison, if we used steady state aerodynamic data, the lift, for example, would, of course, be in phase with the motion and if plotted here would follow the same curve as the angle. However, the actual lift on the airfoil is shown by the dotted line and you can see that the lift reaches a maximum before the motion reaches its maximum. In other words there is a phase difference between them and in this case the lift leads the motion. You can also see that it differs in its maximum value from that found from steady state data. A similar situation also exists for the moment which is shown by the dashed line. The moment in this case lags the motion.

The magnitudes and phases must be known as they determine whether energy is being transferred into or out of the structure. Thus we need

to know four quantities to describe the aerodynamics for a simple motion of this type, namely magnitude and phase of both the lift and moment. Furthermore, it is necessary to know these four quantities for every motion or degree of freedom entering into flutter.

The oscillating forces, moments and phases have been derived theoretically for rather idealized conditions and have proven most useful in all types of flutter calculations. There are however, many flight conditions and configurations that stretch rather severely the assumptions of the theory and there are other conditions for which no theory exists. It is for many of these cases where we need experimental measurements of the oscillating air forces.

I would like to describe two of the techniques that we are using to make direct measurements of the oscillating air forces. One is where we force a wing, like this dummy wing, to oscillate in a prescribed manner and to then measure the resulting air forces by means of the small NACA inductance type pressure gauges mounted in the wing to measure the instantaneous pressure distribution which can be used to determine the magnitudes and phases of the lift and moment.

Another technique is one in which a wing which is similar to this one is mounted on quick response strain gauge beams. The wing is then forced to oscillate in an airstream and the resulting lift, moment and phases are measured on the strain gauge beams and from the power required to oscillate the model. Additional information on the spanwise load distribution is determined by means of a number of the small NACA pressure gages which are mounted in the spanwise direction.

This is a removable test section in which the wing is mounted. The test section is mounted in the Flutter Research tunnel which directs air

in this direction. One sidewall has been removed so that you can see the test wing. This wing is of aspect ratio 2. Other aspect ratios and other plan forms such as delta and swept wings may also be studied in this apparatus. The wing will now be oscillated by turning on the power to the magnetic shakers which are used to force the wing. This wing is oscillating about the midchord. The oscillation is from plus to minus 2° and the frequency is 30 cycles per second.

Methods such as these of making direct measurements of the oscillating air forces may add materially to our knowledge and understanding of many parameters of interest in flutter. However, another method of studying flutter on which we have had to rely almost exclusively is where we measure the flutter speed of various model configurations under various conditions. Many experimental facilities are used, subsonic, transonic and supersonic wind tunnels, bomb drop or freely falling bodies and by the use of rocket vehicles. At the PARD there is an exhibit which illustrates the use of rockets in flutter testing.

The method of measuring the flutter speed gives an integrated answer in which the aerodynamic and structural quantities are intermingled and it is not possible to work backwards and find out what the contributions of all the component parts were. These experiments are used to obtain answers to specific problems, check theories, establish trends and to ascertain what parameters are significant to certain configurations.

The models used range in complexity from very simple cantilever wing models to very complex dynamically similar models. Some typical models can be seen over here. These models vary in construction and in purpose. Here are two delta wing models, one mounted cantilever, the other has a

rolling degree of freedom. Rib and spar models, fighter type, bomber type, wings with spoilers, varying sweep angles, simplified laboratory models, taper and various other planform and configurations. An example of this approach with regard to a complete dynamically scaled jet helicopter will be presented by the next speaker, Mr. Brooks.

1951 MAY INSPECTION

Vibration and Flutter Branch

DYNAMIC MODELS

by Geo. W. Brooks and M. Sylvester

As indicated by the previous speaker, much flutter testing has been done of component parts of aircraft by use of simplified models of the components. If the flutter of the components can be treated as isolated problems, as is often the case, dynamic models of the wings or tails may be tested in wind tunnels or on rocket and bomb vehicles in free-flight. In other cases the flutter and vibration problems may involve the elastic behavior of the entire aircraft and it may be necessary to test complete dynamic models of the aircraft under free-flight conditions.

Recent design trends, particularly for very large aircraft, have indicated the need for flutter and vibration studies using completely scaled dynamic models. Such models are of necessity complex instruments to be had only at considerable cost and effort, but if properly designed they are capable of providing much useful information. They may be used to obtain data from actual vibration and flutter tests which cannot be obtained on the actual ship without risking destruction. They may be used to indicate the beneficial or detrimental effects of changes in design; a particularly desirable feature for non-conventional types. In essence, such models are effective mathematical and physical analog computing machines in that they may be used to help set up and solve certain complex vibration and flutter problems which are difficult to formulate let alone solve.

This dynamic model of a large jet helicopter is such a model. Because of the growing interest expressed in large helicopters and the unique design features of this particular helicopter, this model was

constructed and tested to determine to what extent available theories may be applied to predict the behavior of such aircraft under free-flight conditions. In addition it was considered desirable that the model be dynamically scaled in order that the results of the model and full scale tests might be compared.

In consideration of the vibration and flutter problems involved, the flexibility and damping of the tires, landing struts, and pylon as well as the rotor characteristics were all important parts of the problems, hence, it was necessary to scale the full scale properties of these essential components. The projections which you will see as I rotate the blades toward you are counterweights which are used to adjust the blade flutter characteristics. Since the problems also depended on the flight condition, it was necessary to fly the model with various loadings and to make various types of take-offs and landings.

The model tests in connection with these objectives have been successfully completed; and the model behavior correlated well with that of the full scale ship in so far as the ship has been tested. In an effort to establish the flutter trends and margins for various changes in the design parameters, flutter was obtained on the model many times. Theoretical flutter calculations have been made for different values of blade mass, damping and stiffness and the trends obtained from theory and experiment by variation of the flutter parameters are in good agreement. One significant conclusion drawn from the tests is that the predominant modes involved in the flutter of the model were the flapping mode and first torsion mode.

We should now like to give you a flight demonstration. Since the flutter of the blades is a rather violent and dangerous condition, we

will not demonstrate flutter on the model but the flutter will be shown by a short movie following the flight demonstration. The model is powered by compressed air which passes up through these plastic tubes, out through the blades and is expanded through the tip jets. It is equipped with conventional control devices but for demonstration purposes the controls will be fixed and the model will be controlled by the cables attached to the lower bay of the fuselage. The cables attached just below the pylon are safety cables.

The flutter which you will see in the movie was photographed with a camera mounted on the pylon and turning with the rotor as illustrated by this camera model. There will be some downwash during the demonstration so you might be careful of your cigar ashes.

FLIGHT DEMONSTRATION

Remarks Before the Movie

As I mentioned before, the movies which you will see were taken with a camera directed toward the blade tip. The motion is slowed down about 5 times and you will see the blades just before the flutter speed is reached and during flutter. The increased drag induced by the flutter is an effective safety feature in that it slows the rotor down and momentarily stops the flutter. The speed then increases and the flutter reappears. For this reason the flutter occurs intermittently.

Remarks During Movie

The rotor speed is now approaching the flutter speed and about 70 percent of the blade is visible. The blade is now fluttering.

FINAL REMARKS

In conclusion it might be mentioned that both the simple dynamic model and the completely scaled model are playing important roles in research. In addition, completely scaled models such as the helicopter model which we have demonstrated are particularly useful in the evaluation of unique designs and modifications.

This concludes the discussion at this location. If you desire you may inspect the various models on display.

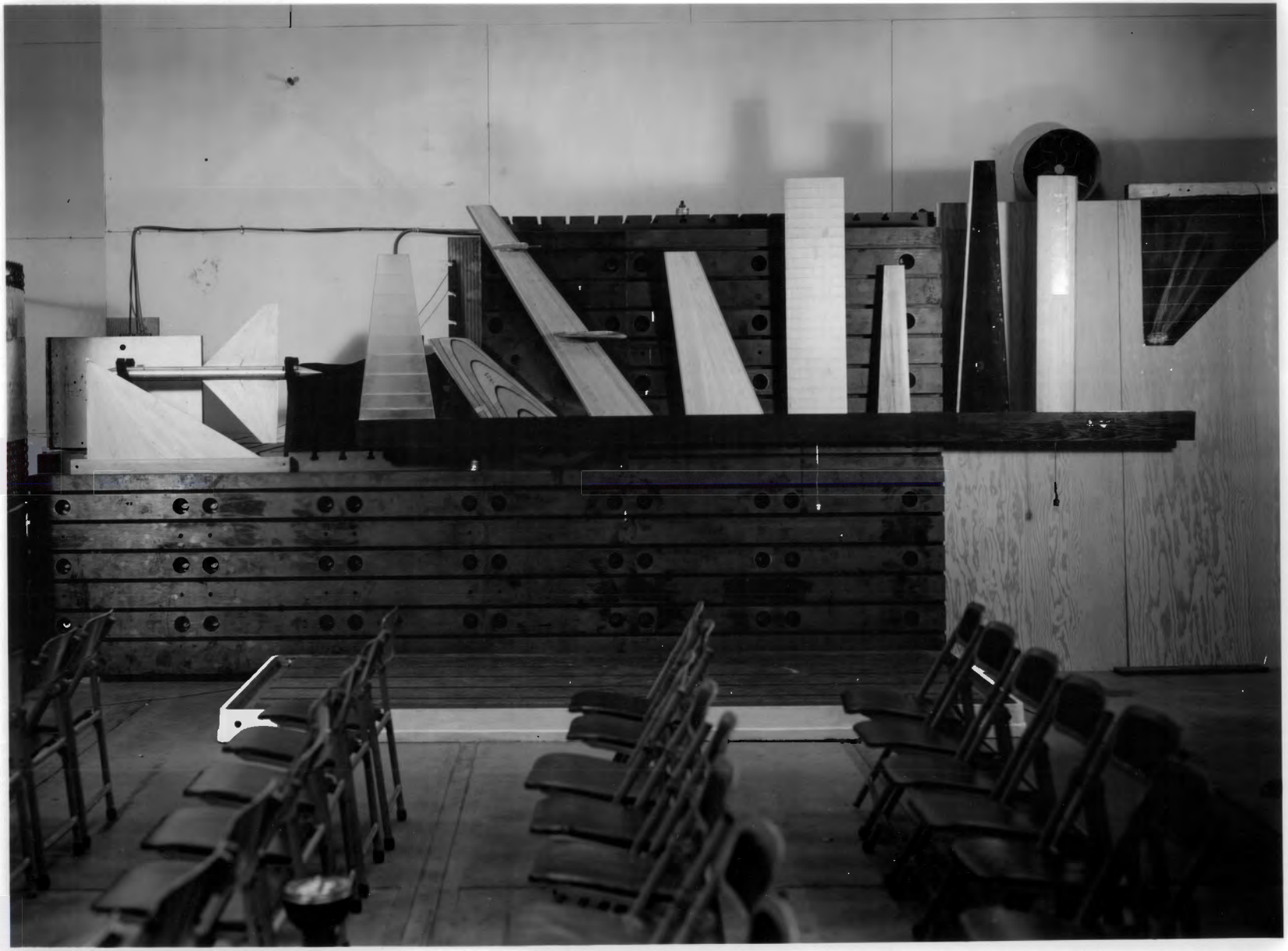

NACA

LAL 70556

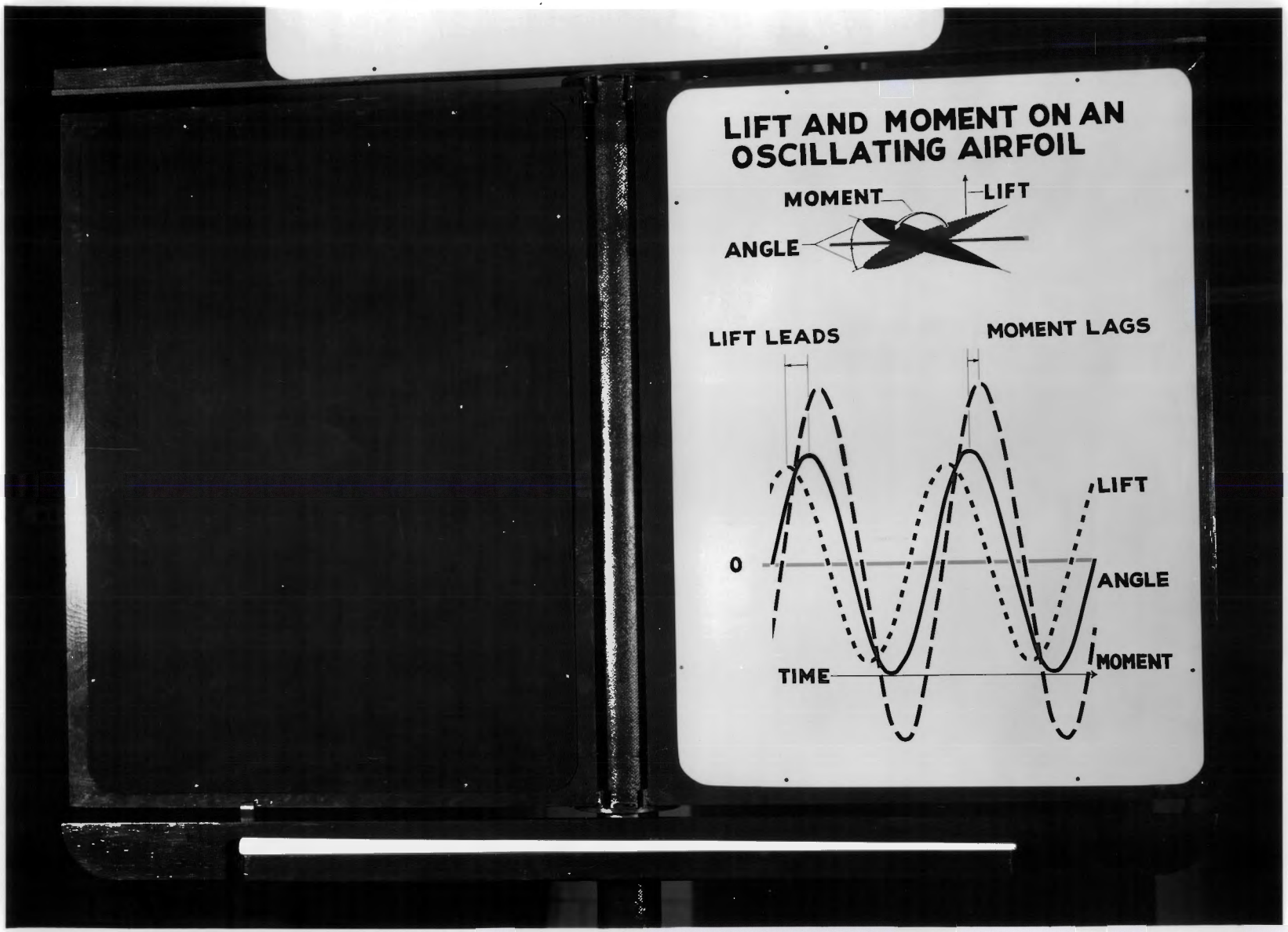

NACA

LAL 70557

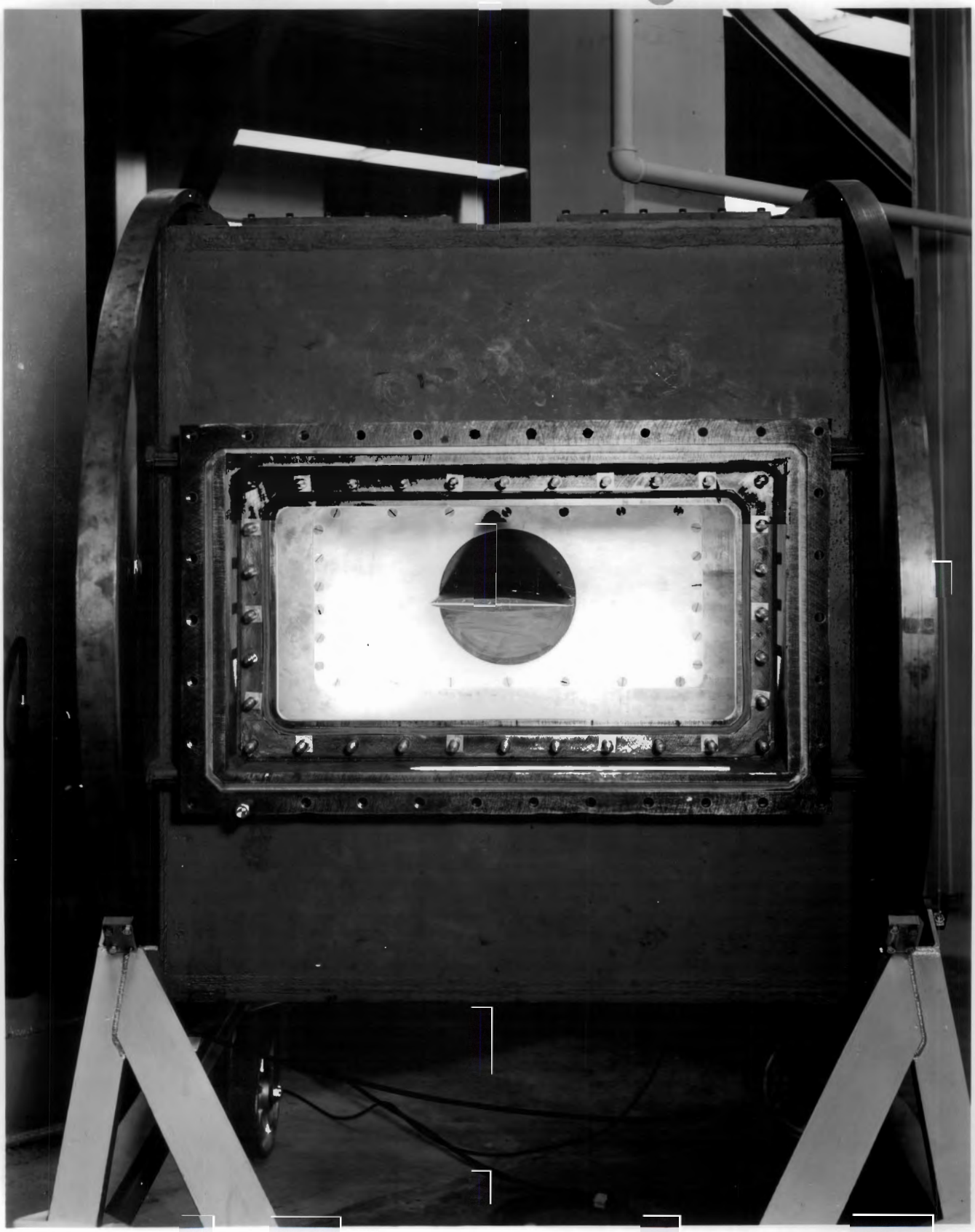

NACA

LAL 70559