Alternate Speakers: T. V. Bollech and S. H. Spooner, 19'PT.

1949 BI FST

(BOLLECH)

19-Foot Pressure Tunnel Talk Presented in F.S.T. at

1949 Biennial Inspection

May 18, 20, 23, 25

Much of the work of the large low-speed wind tunnels is concerned with improving the landing characteristics of high-speed wings. The problems, of course, are the low maximum lift coefficient and the longitudinal instability near maximum lift. Basically, these problems result from the peculiar nature of the flow over a thin sweptback wing. The phenomena are especially pronounced when the wing has a sharp leading edge like this one. This is a model of a wing that was studied here in the Full-Scale Tunnel. The chordwise pressure distributions are shown on this side, and the flow is pictured on this side. At fairly low angles of attack, the flow separates from the leading edge and then reattaches to the surface. The size of the separation bubble increases from the root to the tip, partly because the low-energy air in the bubble collects outward under the influence of the lateral pressure gradient. The measured pressure distributions show that the suction is high and nearly uniform within the bubble and drops off sharply behind it. At moderate angles of attack the bubble covers the entire chord at the outboard sections so that these sections are then effectively stalled. A point of interest is that the flow is rotating violently within the bubble, so that this separation region is actually indistinguishable from a bound vortex lying on top of the wing and trailing off about here where the sections are completely stalled.

For this wing the entire phenomena were eliminated - at least at the moderate angles of attack - by deflecting a leading-edge flap to prevent the separation and thereby increasing the maximum lift coefficient by 0.2 and greatly improving the stability of the wing.

For sweptback wings with rounded leading edge, separation tends to occur mainly over the outer portions of the wing. Studies have been made of various methods of controlling this separation and the longitudinal instability normally associated with it. Tests made here in the Full-Scale Tunnel of a 47.5° sweptback wing have demonstrated that removing the boundary layer through a slot located along the 1/2-percent-chord station eliminated the instability of the plain wing at the stall and increased its maximum lift by about 0.15.

Another way of controlling the flow over the wing is through the use of leading-edge flaps. We present on this chart some results of a study made in the 19-Foot Pressure Tunnel of various combinations of leading- and trailing-edge flaps on this 48° sweptback wing. This wing had an aspect ratio of 5.1 and NACA 64-210 airfoil sections normal to the quarter-chord line.

The plain wing developed a maximum lift coefficient of only 1.15; and, as indicated by the upward break in the pitching-moment curve, it was unstable at the stall. The addition of partial-span double-slotted flaps and 0.5-span round-nose extensible leading-edge flaps increased the maximum lift from 1.15 to 1.50, greatly reduced the angle of attack for a given lift coefficient, and, as shown here, promoted longitudinal stability throughout the lift range. Extending the double-slotted flaps over the full span gave an additional gain of about 0.25 in $C_{L_{max}}$, but it was accompanied by large trim changes and instability in the high lift region.

It turned out that the longitudinal stability of this particular wing at the stall depended on the combination of leading- and trailing-edge flap spans as shown in this diagram, which we might call a stability diagram. The ordinate is leading-edge flap span measured inboard from the wing tip. The abscissa is trailing-edge flap span measured outboard from the root. The dots denote the various combinations that were investigated.

As I have previously mentioned, the plain wing had unstable nose-up pitching-moment variation in the high-lift region of the type shown here. The plain wing configuration is represented on the stability diagram by this point. The addition of the round-nose extensible leading-edge flap over approximately the outer half of the wing brought about a stable break in the pitching moment at the stall of the type shown here.

When trailing-edge high-lift flaps were employed, it was found that the optimum leading-edge flap span was slightly reduced; but of more importance, it was found that there was a definite limit to the amount of trailing-edge flap span which could be used without promoting the type of stability shown here and which we refer to as undesirable or marginal stability. For the remainder of the region where the leading-edge flap span exceeds 60 percent, the wing possesses unstable pitching-moment breaks at the stall; and where the trailing-edge flap span exceeds about 60 percent, it is impossible to achieve even marginal stability with any leading-edge flap span. Recent investigations have shown that leading-edge roughness can in certain critical arrangements decrease the size of the stable region. The designer is cautioned to bear this fact in mind when dealing with the

borderline configurations.

The present rapid development of airplanes and missiles which are expected to fly at Mach numbers of about 2.0 and above has focused increasing attention on the characteristics of unswept wings incorporating thin airfoil sections with sharp leading edges. The Ames Laboratory has investigated an unswept wing of aspect ratio 4.0, taper ratio 0.5 and incorporating 4-1/2-percent-thick symmetrical double-wedge airfoil sections. We present its low speed characteristics on this chart. The maximum lift coefficient of the plain wing is only 0.74. Deflecting the leading-edge flap provides a value of C_{Lmax} of 1.04, and deflecting the plain trailing-edge flap provides a C_{Lmax} of 1.14. Optimum deflection of both the leading- and trailing-edge flaps increased the maximum lift coefficient to 1.40, which is nearly double that of the plain wing.

As shown by the pitching-moment curves, this wing was stable at the stall in all cases.

This concludes our brief discussion of some of the landing problems connected with high speed wings.

I would now like to introduce Mr. Horton who will discuss some of the applications of boundary-layer control.

Talk Presented at the Full-Scale Tunnel for the Langley 1949 Biennial Inspection. Alternate Speakers: E. A. Horton and D. L. Burrows, LTS.

The first application of boundary-layer control to be discussed is that of extending the laminar layer.

Last year at the Ames Laboratory we discussed the results of continuous suction through a porous surface which completely covered an airfoil model. Further research on this problem is being conducted, but because of the lack of a suitable porous material no further improvements have as yet been obtained. During the past year an investigation has been made of suction through a number of small slots as a means of increasing the relative extent of the laminar flow. This slide shows a sketch of a model designed to obtain full-chord laminar flow at a Reynolds number of 25 million. The model had a chord of 36 inches and 41 slots on each surface. The slots extended from 9 percent to 90 percent of the chord, were 3/4 inches apart and .005 inch in width.

This close spacing of the slots was necessary for a model designed to operate at such a high Reynolds number in order to keep the boundary layer Reynolds number from reaching excessive values and to keep the suction power requirements low. The small width of the slot was necessary because tests have shown that in order that the suction slots in themselves avoid causing transition the slot width must be appreciably less than the boundary layer thickness. Full-chord laminar flow was obtained on this model up to a Reynolds number of approximately 3 million with very little difficulty. The attainment of extensive laminar flow became increasingly difficult as the Reynolds number was

increased. By the elimination of a number of extremely small surface irregularities, particularly in the vicinity of the slot entrance, it was possible, however, to obtain full-chord laminar flow up to a Reynolds number of 10 million. Experimental evidence indicates that slots do not delay transition caused by small surface irregularities. In spite of the practical difficulties of obtaining sufficiently smooth surfaces to allow extensive laminar flow, further research on laminar boundary-layer control is planned, because the possible gains in performance are so large.

The second application of boundary-layer control to be discussed is that of preventing separation of the turbulent boundary layer over the rear portion of thick airfoil sections such as are required for very high aspect ratio wings. This type of boundary layer control would be most applicable to large high aspect ratio ~~long range~~ aircraft. Examination of the designs of a number of such airplanes indicates that for structural reasons the ratio of the span to root thickness (not thickness ratio) is generally held approximately constant and has a value of about 35. The consequence of keeping this ratio of the span to root thickness constant as the aspect ratio is varied is shown in the lower part of the slide where the root section thickness ratio is plotted against aspect ratio for a series of wings having a taper ratio of .4. It is seen that the root section thickness ratio increases linearly

with aspect ratio. For an aspect ratio of 6 the root section thickness ratio is 12 percent, whereas for an aspect ratio of 20 the root section thickness ratio is 40 percent. The relative proportions of the two root sections shown on the slide are for wings having equal areas.

In this slide the maximum value of the lift drag ratio has been plotted against aspect ratio for a series of wings having a ratio of span to root thickness of 35 both with and without boundary layer control. The profile drag of the wings was calculated from section data obtained with leading edge roughness. An increment of .01 has been added to the profile drag coefficient of both wings to allow for the drag of the fuselage and tail surfaces. In calculating the drag of the boundary layer control wings the drag equivalent of the suction power has been included. Without boundary layer control it is seen that the maximum lift-drag ratio actually decreases with increasing aspect ratio for aspect ratios greater than 11. This effect was to be expected because of the increasing drag of the thick root sections. The use of boundary layer control eliminates the separated flow over the rear of the thick sections and thereby makes the use of much thicker root sections and consequently much higher aspect ratios feasible. This slide indicates that the use of boundary layer control increases the optimum aspect ratio from about 11 to about 20 with a corresponding gain in lift drag ratio of about 28 percent. It should be pointed out that this gain

does not depend on the existence of extensive regions of laminar flow. I thought it would be interesting for you to see what a wing of aspect ratio 20 looks like in comparison to one of a more normal aspect ratio of 11. In regard to the practical speeds of high aspect ratio wings it may be said that for a wing having an aspect ratio of 20 and a 40 percent thick root section it seems probable that compressibility difficulties will be encountered at speeds somewhat in excess of 350 miles per hour.

It is of some interest to investigate the possible gains in performance of a large long range airplane by the use of this type of boundary layer control. The hypothetical airplane investigated had an original gross weight of 325,000 lbs., a range of 8,000 miles, a 10,000 lb. payload, an aspect ratio of 11 and a wing loading of approximately 70 lbs. per square foot. Adding boundary-layer control to the original airplane (a) increased the pay load from 10,000 lbs. to 35,000 lbs. and adding boundary-layer control and increasing the aspect ratio from 11 to 17(c) resulted in increasing the payload for the same range to 60,000 lbs. In calculating these increased payloads an allowance has been made for the weight of the boundary-layer control equipment and the necessary fuel. On the other hand the improvement in performance may be taken as additional range for a payload fixed at 10,000 lbs. As compared with the original 8,000 mile range for airplane (a),

airplane (b) had a range of 9,200 miles and airplane (c) had a range of 10,600 miles.

Even though the gross weight of the boundary layer control airplanes (b) and (c) were greater than for airplane (a) by the weight of the boundary-layer control equipment and the increase in the payload the calculated ground run distance for both landing and take off of airplanes (b) and (c) was substantially less than that for airplane (a) because the boundary layer control used to increase the maximum lift drag ratio would also increase the maximum lift coefficients of these airplanes.

It appears from these calculated results that of all the applications of boundary-layer control investigated to date, this application to the thick root sections seems to offer the most immediate possibility of improved airplane performance.

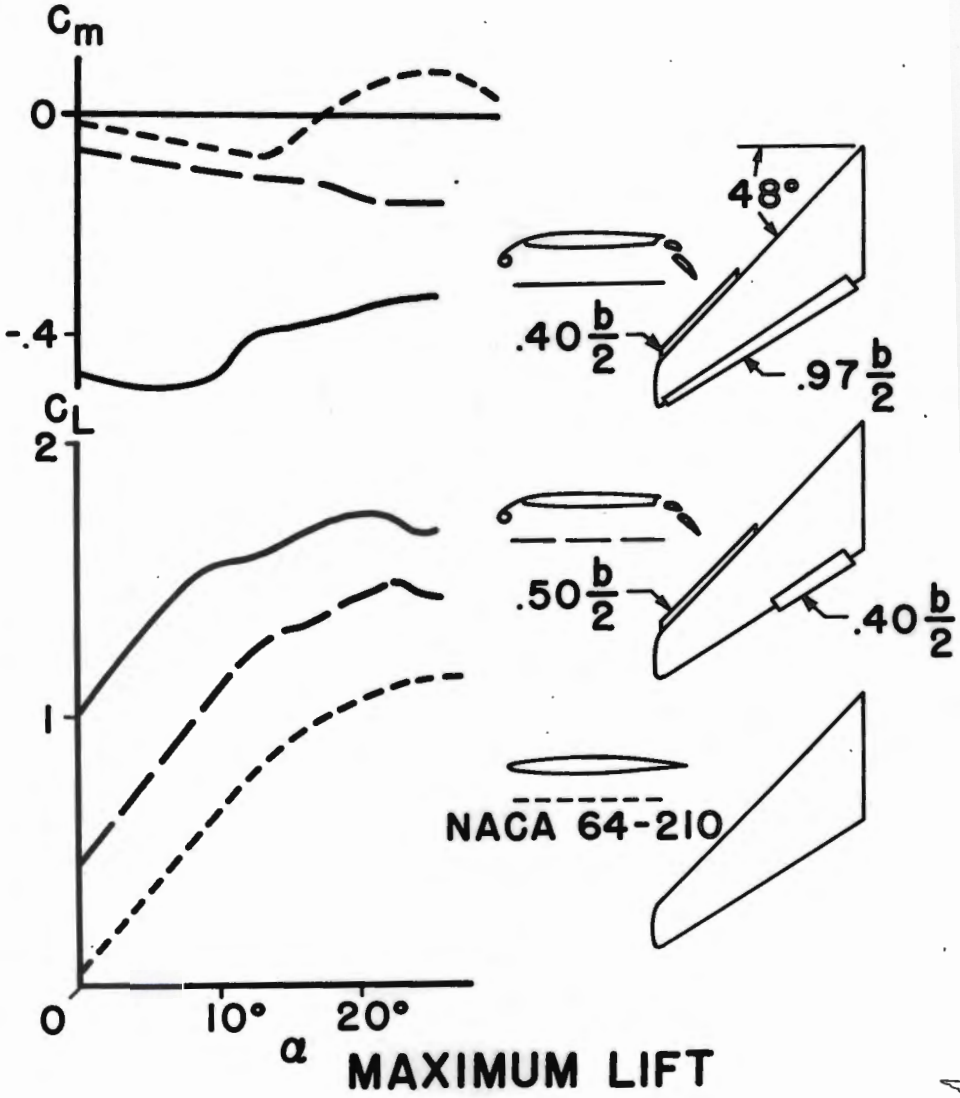

MAXIMUM LIFT

LAL 61120

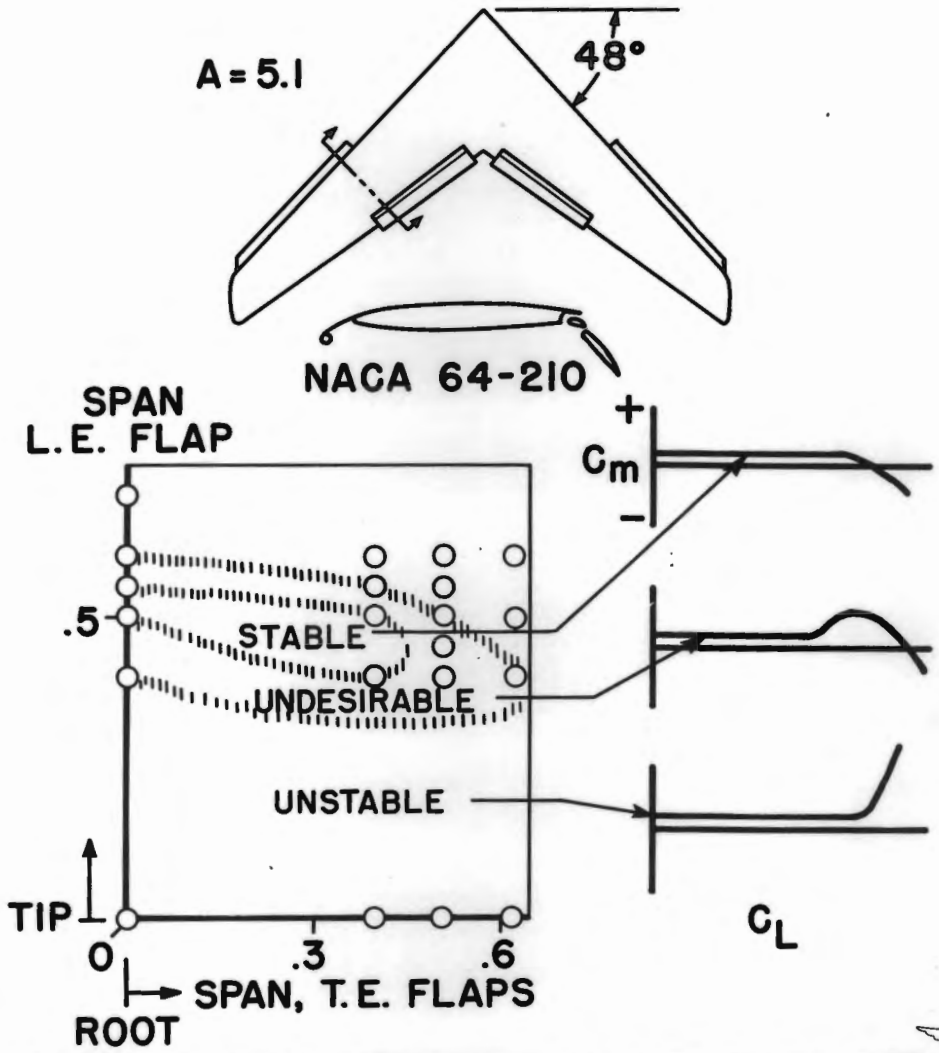

COMBINATION OF L.E. AND T.E. FLAPS

LAL 61121

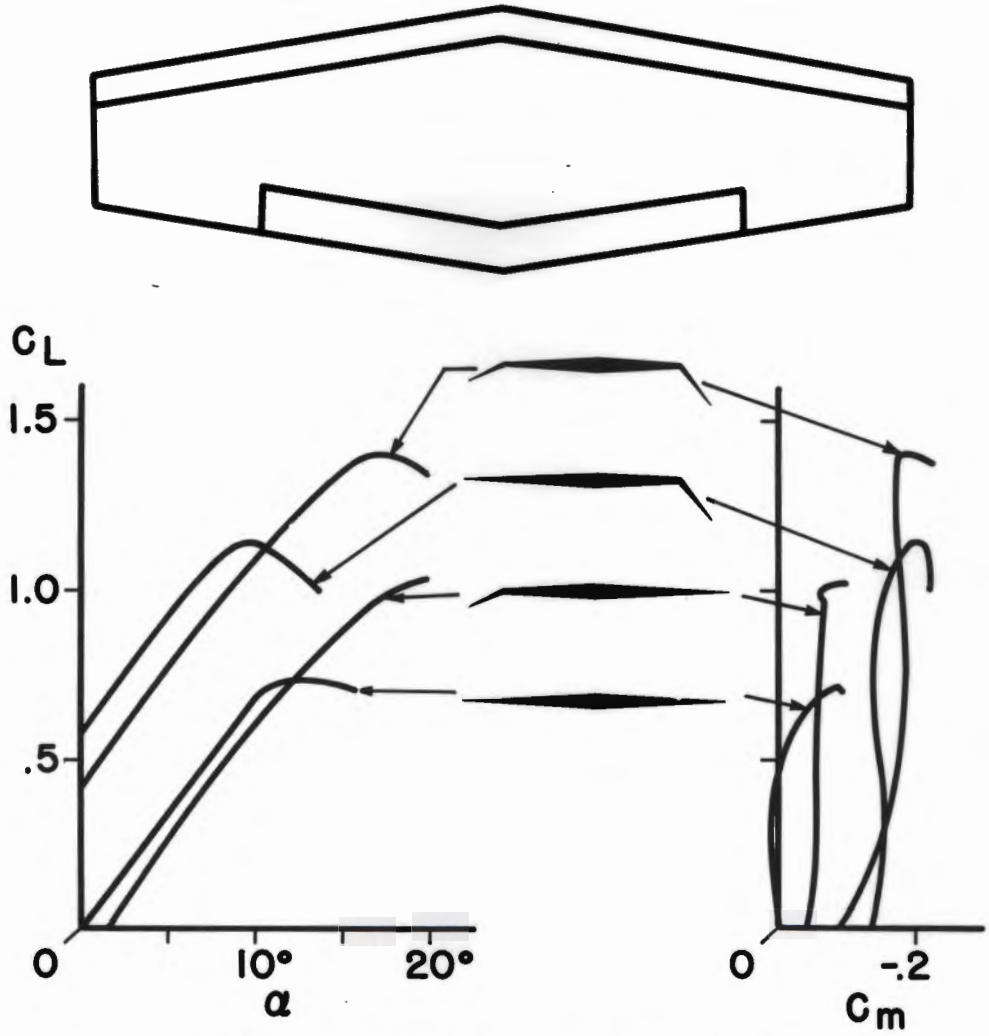

THIN DOUBLE-WEDGE WING

NACA

NACA
LAL 61122

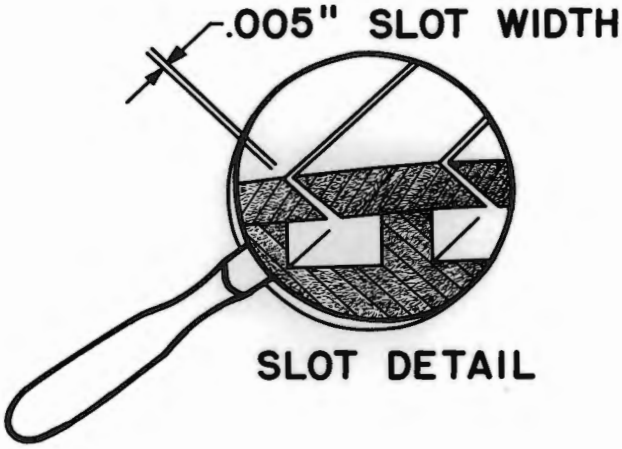

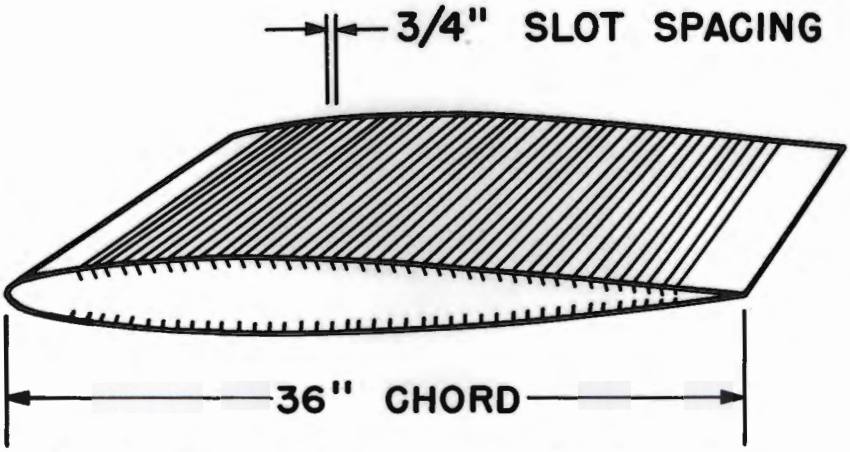

LAMINAR B.L.C. WITH SLOTS

NACA

NACA
LAL 61123

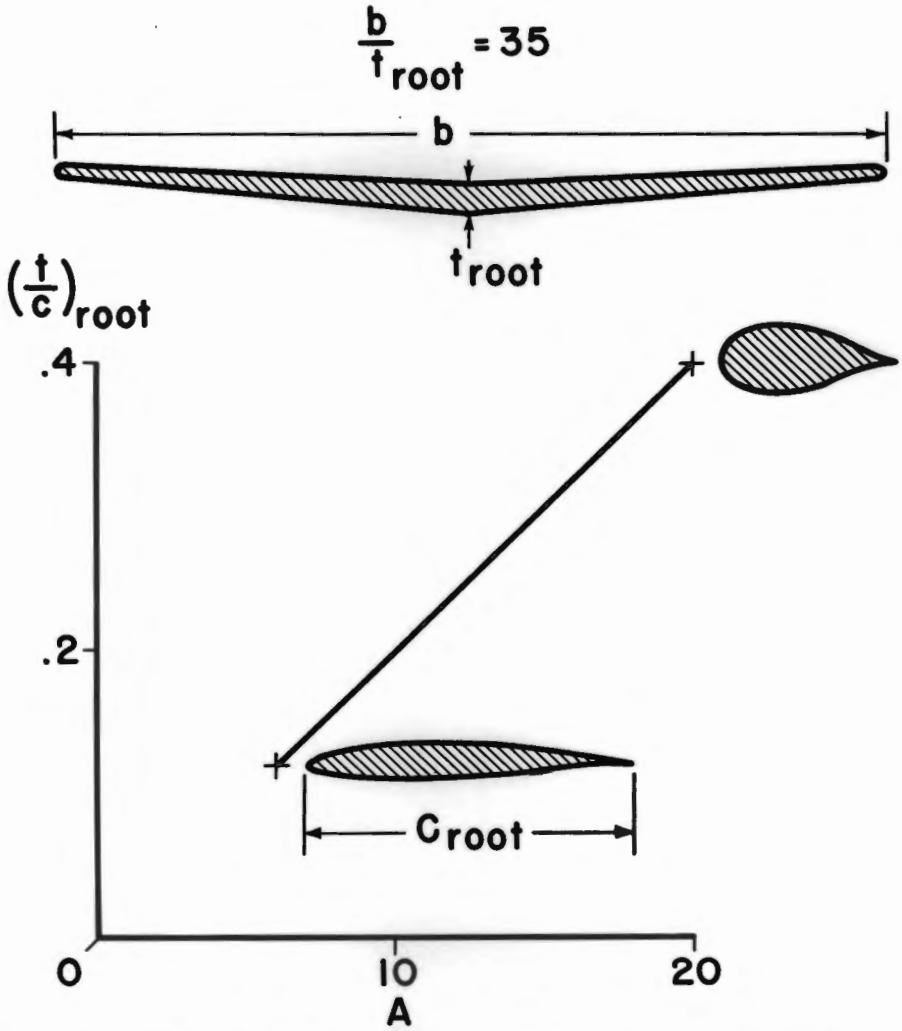

ROOT THICKNESS VS ASPECT RATIO

LAL 61124

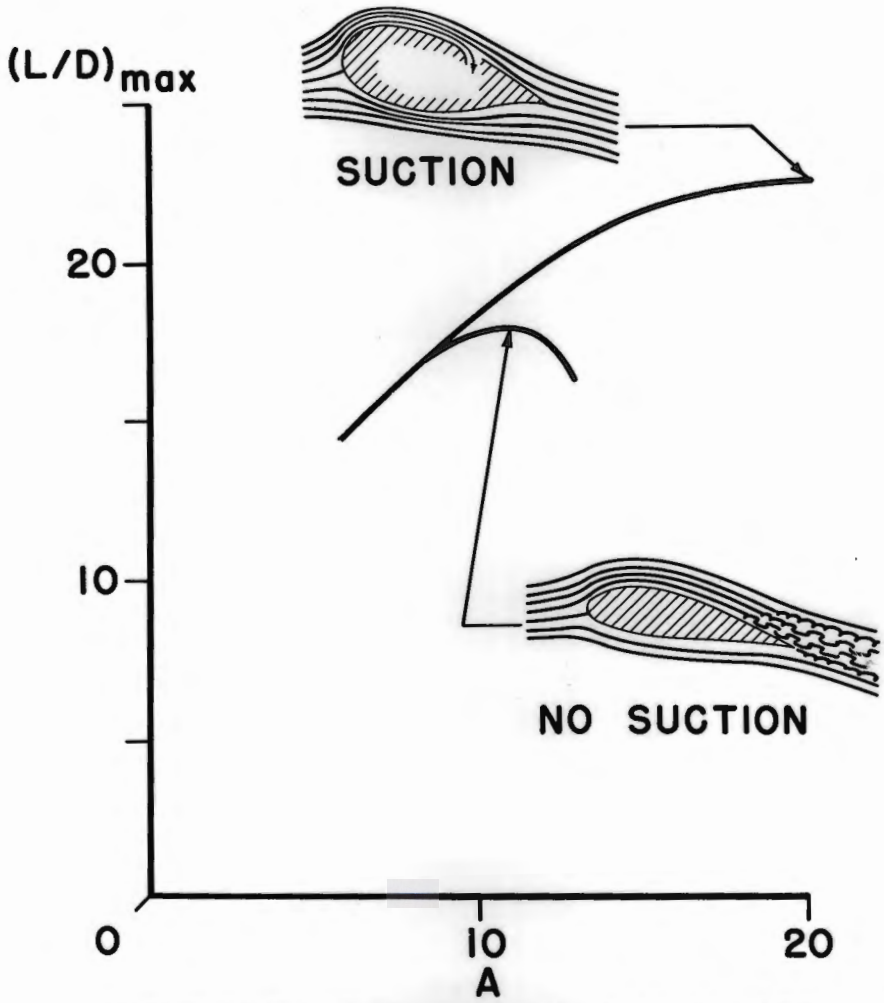

EFFECT OF B.L.C ON (L/D)max

LAL 61125

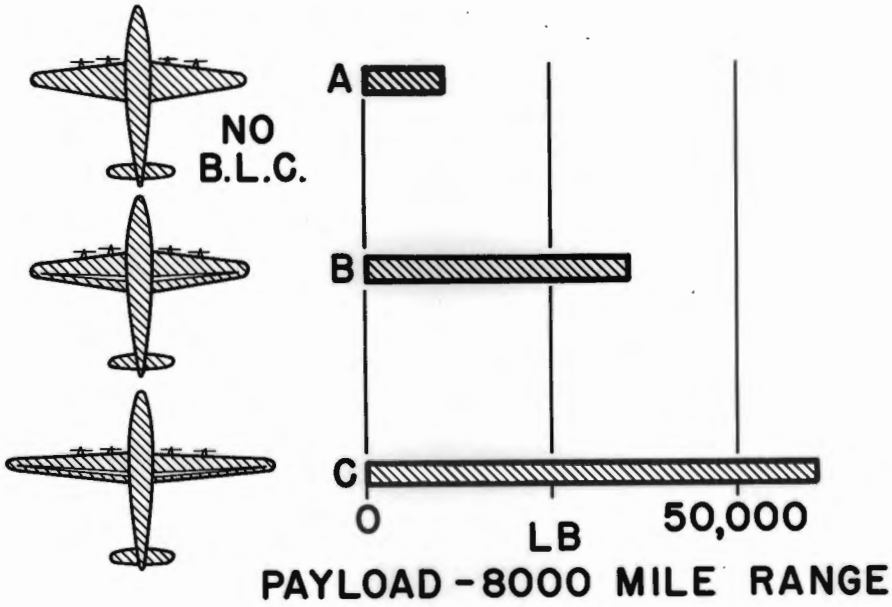

PAYLOAD - 8000 MILE RANGE

RANGE - 10,000 LB PAYLOAD

PERFORMANCE WITH B.L.C.

NACA

NACA
LAL 61126